PORSCHE

AfterSales Training

Cayenne Engine Repair – V8 and V6

P10C

Porsche AfterSales Training

Student Name: _____

Training Center Location: _____

Instructor Name: _____

Date: _____

Important Notice: Some of the contents of this AfterSales Training brochure was originally written by Porsche AG for its rest-of-world English speaking market. The electronic text and graphic files were then imported by Porsche Cars N.A, Inc. and edited for content. Some equipment and technical data listed in this publication may not be applicable for our market. Specifications are subject to change without notice.

We have attempted to render the text within this publication to American English as best as we could. We reserve the right to make changes without notice.

© 2007 Porsche Cars North America, Inc. All Rights Reserved. Reproduction or translation in whole or in part is not permitted without written authorization from publisher. AfterSales Training Publications

Dr. Ing. h.c. F. Porsche AG is the owner of numerous trademarks, both registered and unregistered, including without limitation the Porsche Crest®, Porsche®, Boxster®, Carrera®, Cayenne®, Cayman™, Tiptronic®, VarioCam®, PCM®, 911®, 4S®, and the model numbers and distinctive shapes of Porsche's automobiles such as, the federally registered 911 automobile. The third party trademarks contained herein are the properties of their respective owners. Porsche Cars North America, Inc., believes the specifications to be correct at the time of printing. However, specifications, standard equipment and options are subject to change without notice.

Part Number - PNA P10 C03 Edition - 6/07

Table of Contents

Description	Section
Engine Type Designations	1
Cayenne S and Turbo V8 Engines – 1st Generation	2
Cayenne V6 Engine – 1st Generation	3
Cayenne S and Turbo V8 Engines – 2nd Generation	4
Cayenne V6 Engine – 2nd Generation	5
Conversion Charts	6

Engine Number Identification

Cayenne S/T – V8

Digit:	**1 2 3 4 5 6 7 8**
Example:	8 1 3 0 0 5 0 1

Engine Type: (8 = 8 Cyl. Engine)
Engine Version:
Model Year:
Serial Number:

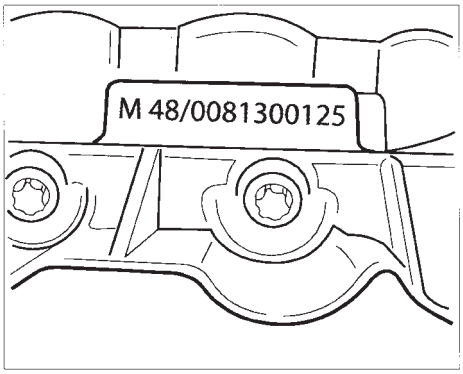

V8 – The engine number is located on the bottom of the crankcase, left side (5-8 cylinder bank), by the oil pan sealing surface. **Note:** Underside paneling needs to be removed.

Cayenne – V6

Digit:	**1 2 3 4 5 6 7 8**
Example:	M 5 5 0 0 5 0 1

Engine Version:

Serial Number:

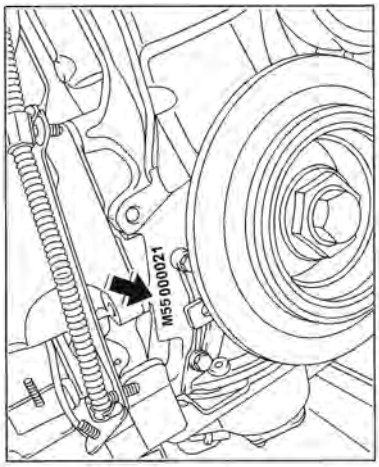

V6 – The engine number is located on the front right of the crankcase next to the crankshaft pulley.

Cayenne/S/T Engine Type Designations Since Model Year 2003

Model Year	Engine Type	Displ. Liters	Engine Power kW / HP	Installed In
2003	M48.00	4.5 V8	250/340	Cayenne S
	M48.50	4.5 V8	331/450	Cayenne Turbo
2004	M02.2Y (BFD)	3.2 V6	184/250	Cayenne
	M48.00	4.5 V8	250/340	Cayenne S
	M48.50	4.5 V8	331/450	Cayenne Turbo
2005	M02.2Y (BFD)	3.2 V6	184/250	Cayenne
	M48.00	4.5 V8	250/340	Cayenne S
	M48.50	4.5 V8	331/450	Cayenne Turbo
2006	M02.2Y (BFD)	3.2 V6	184/250	Cayenne
	M48.00	4.5 V8	250/340	Cayenne S
	M48.50	4.5 V8	331/450	Cayenne Turbo
2008	M55.01	3.6 V6	213/290	Cayenne
	M48.01	4.8 V8	283/385	Cayenne S
	M48.51	4.8 V8	358/500	Cayenne Turbo

Subject **Page**

General 3
Cayenne S Engine Data 3
Cayenne Turbo Engine Data 4
Engine Mounts 4
Crankcase 5
Crankshaft, Vibration Damper 5
Cayenne S/T Pistons 6
Cayenne S/T Cylinder Head 7
Camshafts with Cylinder Specific Cam Contours 8
Chain Drive, Belt Drive 8
Camshaft Adjustment 9
Hydraulic Solenoid Valve 10
Cayenne S Oil Circulation 12
Cayenne Turbo Oil Circulation 13
Oil Spray Jets, Oil Pump 14
Cayenne S/T Crankcase Ventilation 15
Oil Filter 15
Oil Temperature and Level 16
Cooling System 17
Service Position & Engine Removal 20

Notes:

General

The completely new developed V8 engines are a naturally aspirated engine for the Cayenne S and a turbocharged version for the Cayenne Turbo, each with a displacement of 4.5 liters. They are 8-cylinder, 32-valve gasoline engines, with the cylinder banks arranged at 90 degrees and two camshafts per cylinder bank. Particular attention was paid during the development of these new engines to achieving the maximum specific output while at the same obtaining outstanding emissions and fuel consumption characteristics.

Important features of the engine are:

- Two-piece closed deck aluminum crankcase with integrated cast-iron bearing blocks
- Two-piece cylinder heads with separate camshaft housing
- Continuously variable camshaft adjustment on the intake side (VarioCam)
- Cylinder-selective exhaust cam contours
- Integral dry-sump lubrication
- Two-stage oil scavenging, additional turbocharger scavenge pump for V8 twin-turbo engine
- Spray cooling of pistons (V8 twin-turbo engine only)
- Oil to water heat exchanger
- Cross-flow cooling of cylinder heads, longitudinal flow through crankcase

Full-load Curve – Cayenne S

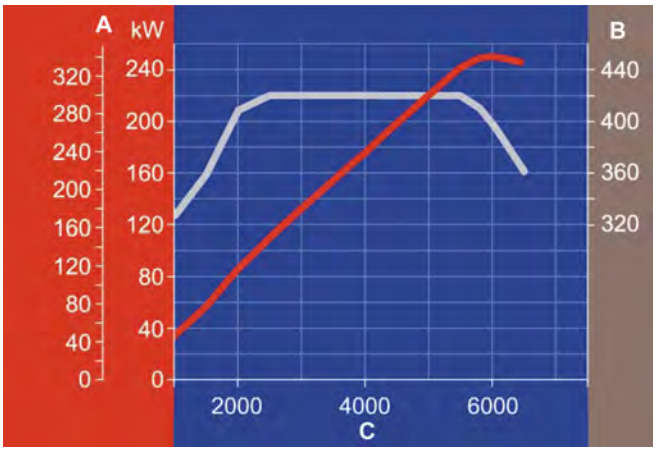

Engine Data

Engine Type	M48.00
Number of Cylinders	8
Bore	93 mm
Stroke	83 mm
Displacement	4.5 Liter
Compression Ratio	11.5
Max. Power	250 kW (340 hp)
at Engine Speed	6000 rpm
Max. Torque	420 Nm (310 ft lb)
at Engine Speed	2500 – 5500 rpm
Governed Engine Speed Tiptronic	6500 rpm
Engine Weight	227 kg (500 lbs)
Firing Order	1 - 3 - 7 - 2 - 6 - 5 - 4 - 8

Notes:

Engine – Cayenne S/T – 1st Generation

Full-load Curve – Cayenne Turbo

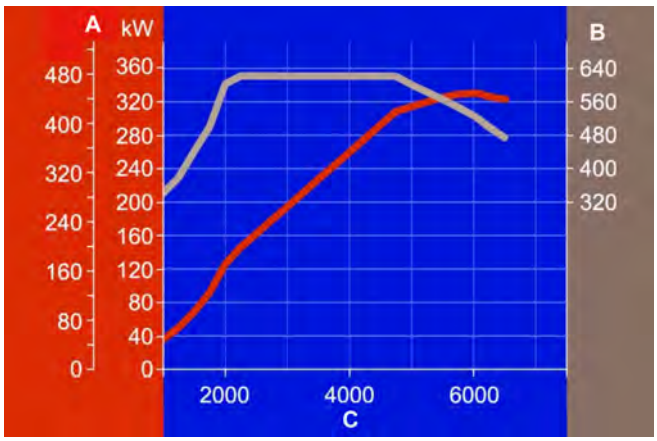

Engine Data

Engine Type	M48.50
Number of cylinders	8
Bore	93 mm
Stroke	83 mm
Displacement	4.5 Liter
Compression Ratio	9.5
Max. Power	331 kW (450 hp)
at Engine Speed	6000 rpm
Max. Torque	620 Nm (458 ft lb)
at Engine Speed	2250 - 4750 rpm
Governed Engine Speed Tiptronic	6500 rpm
Engine Weight	253 kg (558 lbs)
Firing Order	1 - 3 - 7 - 2 - 6 - 5 - 4 - 8

Notes:

Engine Mounts

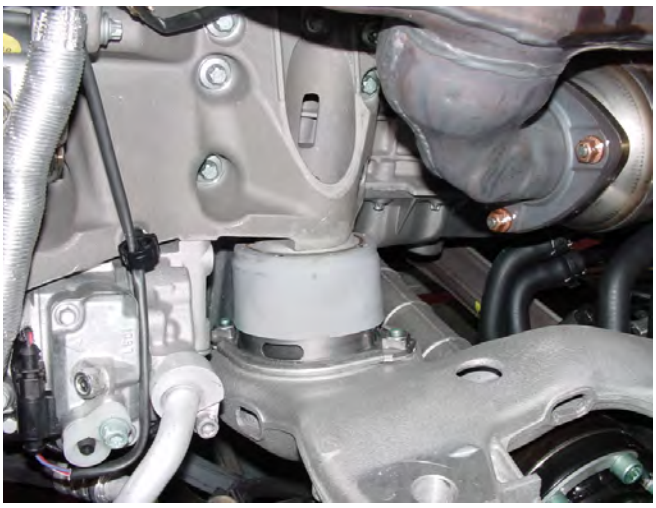

Engine Mount

The engine mounts consist of two hydraulic mounts attached to an engine cross member and an elastic mount in the center of the transmission. The hydraulic mounts absorb low-frequency vibrations with their rubber bearing, and also suppress high-frequency vibrations with their damping section. This ensures that no undesirable vibration and noise is conducted into the body. To limit loads on the rubber body that occur the engine mounts have stops. The engine cross-member is formed as a hollow profile for weight reduction and rigidity.

An additional torque strut on the cylinder head absorbs the high torque produced by the V8 engines.

Crankcase

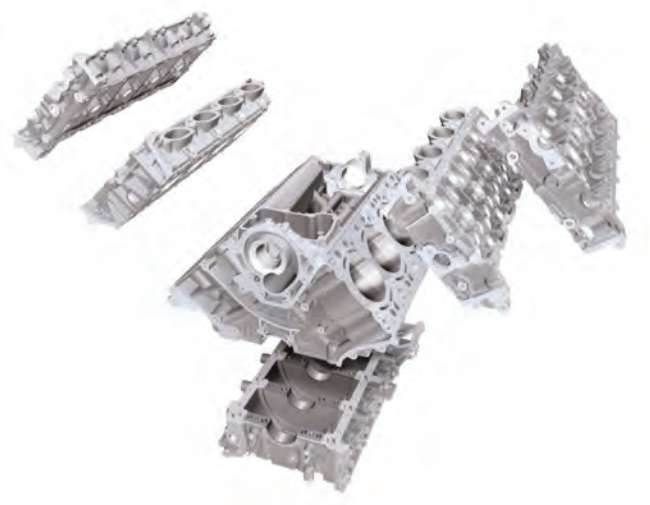

Engine Components

The crankcase in the Porsche Cayenne is a two-piece "closed deck" design, made of a light-weight alloy (AlSi17Cu4Mg). In closed deck construction, the sealing surface of the crankcase to the cylinder head is largely closed, only the bores and passages for oil and coolant are present. This design will strengthen the entire structure. The result is less cylinder distortion and benefits in oil consumption.

The alloy for the crankcase housing is a so-called hypereutectic alloy, in which silicon crystals are formed. To create a wear-resistant surface on the cylinder walls, these silicon crystals are uncovered by multiple special honing procedures. To minimize thermal changes in bearing clearance and thus reduce mechanical noise, the lower section of the crankcase is furnished with cast-in cast iron bearing blocks. Another advantage is that when the engine is at operating temperature, oil flow at the main bearings does not increase substantially as a result of the constant bearing clearance (approximately the same coefficient of thermal expansion between steel/crankshaft and cast iron/bearing block).

Crankshaft

Crankshaft

The drop-forged crankshaft runs in five bearings and has eight counterweights. Main bearing number 3 is designed as a thrust bearing. Axial play is determined by two thrust washers, which are set into the bearing housing halves. The main bearings are dual material bearings and are 64 mm in diameter. The connecting rod bearings are triple material bearings and are 54 mm in diameter.

Vibration Damper

A vibration damper is used to reduce torsional vibration at the crankshaft and additionally reduce component loads.

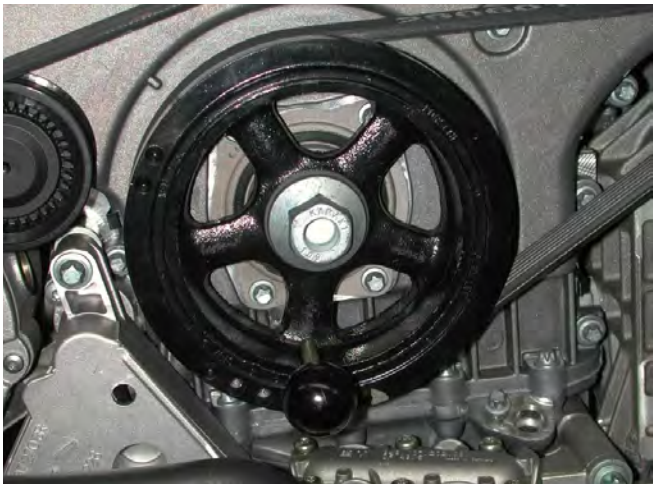

Vibration Damper

Notes:

Connecting Rods

Connecting Rod

After machining, the forged connecting rods are broken apart at the rod bearing (cracked). The two parts are centered to one another by means of the resulting fracture pattern. To prevent incorrect assembly, the connecting rods are marked with additional matching pairs of numbers and the bores for the big-end bolts are offset.

Pistons

The pistons for the naturally aspirated engines are cast.

Cayenne S Piston

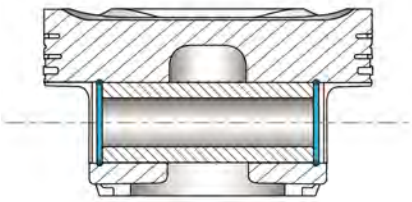

Cayenne S Piston Cross Section

The pistons for the turbocharged engines are forged.

Cayenne Turbo Piston

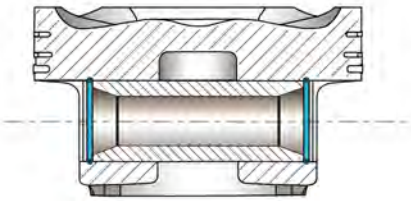

Cayenne Turbo Piston Cross Section

The pistons of the naturally aspirated engine have different combustion bowls than the turbocharged engine. The bowls in the pistons for the turbo engine are much deeper in order to reduce the compression ratio.

Notes:

Cayenne S Cylinder Head

The cylinder head for the Cayenne S is designed in two pieces. It consists of the cylinder head and the camshaft housing with the lifter guides and the camshaft bearings. This multi-piece construction offers the best design for the use of high-heat resistant aluminum alloys to handle maximum specific loads. The exchange of gases is managed by 4 valves per cylinder, which are operated directly by hydraulic self-adjusting lifters. The two intake and two exhaust valves are arranged in a V, with a valve angle of 29.6º.

Cayenne Turbo Cylinder Head

The cylinder head design of the Cayenne Turbo is identical in principle to that of the Cayenne S, however, due to higher loading a special high-heat resistant aluminum alloy is used. The intake ports in the cylinder head have been reworked with respect to different gas velocities compared to the naturally aspirated engine.

Valves and Valve Springs

The valve stem diameter for the intake and exhaust valves on the Cayenne S and the Cayenne Turbo is 6 mm. The intake and exhaust valves are bi-metallic, this means different materials are used for the valve head and the lower part of the stem than for the upper part of the valve stem.

The exhaust valves for the Cayenne Turbo are sodium-filled. The diameter of the intake valve heads is 37.1 mm and that of the exhaust valve heads is 32.5 mm for both engine versions.

The intake and exhaust valve springs on the Cayenne S and the intake valve spring on the Turbo are single helical springs. To ensure proper closing of the exhaust valves even at higher pressures in the exhaust system, dual valve springs are installed on the exhaust side on the Cayenne Turbo.

Notes:

Camshafts with Cylinder Specific Cam Contours

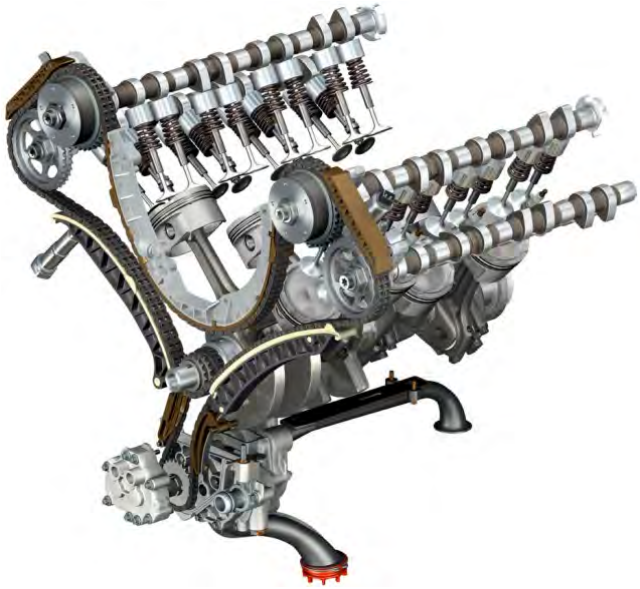

The intake and exhaust camshafts for both engine versions have a base diameter of 38 mm. Intake valve lift is 10 mm. Exhaust valve lift for cylinders 1, 2, 6 and 8 is 8 mm, for cylinders 3, 4, 5 and 7 exhaust valve lift is 9.85 mm.

The engine design with a V8 crankshaft and 90º throws ensures outstanding balancing of masses and forces. However, with this engine design and a layout with conventional cam contours (equal cam lift) individual cylinders would hamper each other as gas flows out into the exhaust manifold. The reason is that the exhaust lead impulse of the particular cylinder on the exhaust stroke (e.g. cylinder number 2) gets into the crossover phase of the following cylinder (cylinder number 3). This would have a detrimental effect on cylinder filling. In addition, excess residual gases have a negative effect on the knock limit. Because of the Cayenne's firing order (1 – 3 – 7 – 2 – 6 – 5 – 4 – 8), cylinders 3 and 4 as well as 5 and 7 would be at a disadvantage in their charge. These cylinders are given higher cam lift. This step achieves equal filling of the cylinders, which results in an optimized torque curve across the entire rpm range.

Chain Drive

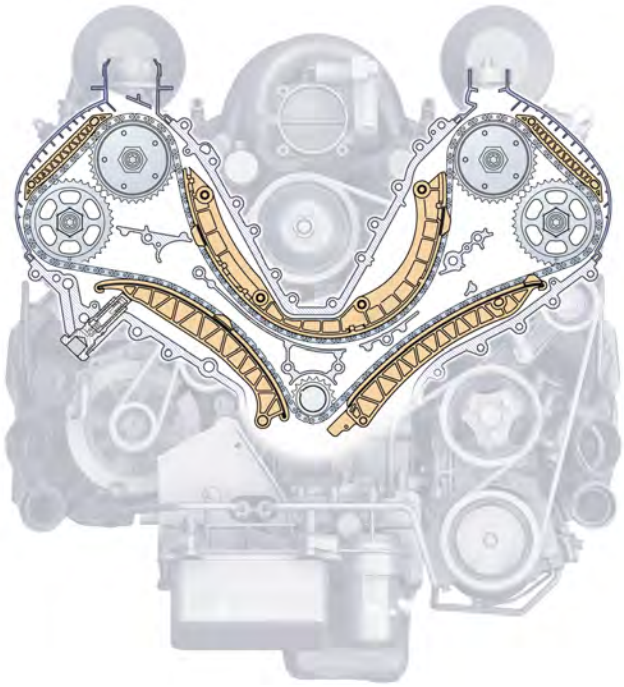

The chain drive consists of a duplex roller chain driving both intake and exhaust camshafts. The chain has specially coated guides. The lower guide on cylinder bank 1 – 4 is designed to be a tensioner at the same time. The chain tensioner is hydraulic and maintenance-free.

Belt Drive

A poly-rib belt drives accessories such as the alternator, coolant pump, power steering pump and air-conditioning compressor by the vibration damper. A maintenance-free, hydraulic belt tensioner maintains correct tension.

Notes:

Camshaft Adjustment

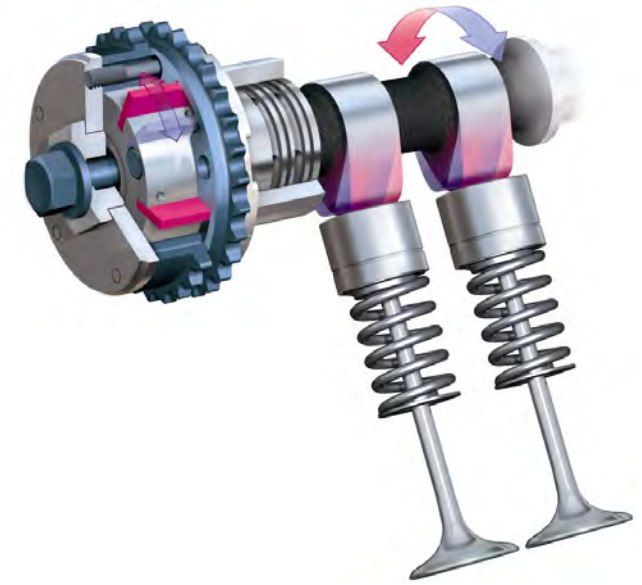

Camshaft adjustment at the intake camshaft is based on the operation of a vane-type adjuster. The DME control unit determines the current position of the camshaft to the crankshaft (actual angle) from the engine speed sensor and Hall sensor signals. The position control in the DME control unit determines the desired specified angle via the programmed map values (rpm, load, engine temperature). If there is a difference between the specified and actual angle, a regulator in the DME actuates a hydraulic solenoid valve according to the desired adjustment.

Adjustment angle is 50° crankshaft angle (25° camshaft angle).

Notes:

Vane-Type Adjuster

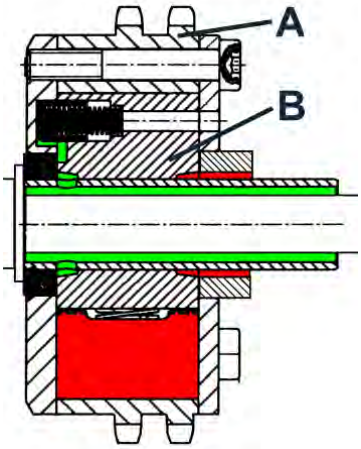

A - Stator
B - Rotor

The vane-type adjuster consists of the stator (A), attached to the crankshaft through a sprocket, the rotor (B), attached to the camshaft; the vanes and two covers. The sprocket is attached to the outer diameter of the stator. It is a positive fit to the crankshaft through the chain drive. The rotor is bolted to the camshaft. Rotation between rotor and stator is possible (inner mounting of the adjuster). This rotation is limited by the vanes mounted in the rotor and by the stops on the stator. The vanes also divide each of the recesses on the stator into two chambers.

These chambers can be filled with oil through oil orifices and oil lines in the rotor. A cover attached to the sprocket seals the chambers laterally. The adjuster is locked to a stop (retard). To do this, a spring-loaded pin in the retard position of the adjuster moves into a hole in the cover. A positive connection is created between stator and rotor for starting the engine. This prevents noise during the time when the oil pmp is starting to turn.

Notes:

Vane-Type Adjuster (cont'd)

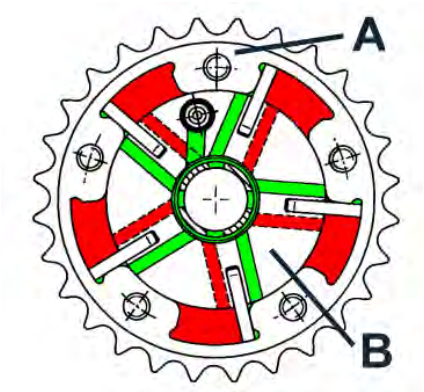

A - Stator
B - Rotor

Operation

Two chambers acting in different directions are provided in the adjuster. Filling one chamber causes the rotor to rotate in one direction. By filling the other chamber, the rotor and the camshaft can be rotated back to its initial position. The oil from the non-pressurized chamber flows to the hydraulic solenoid valve back into the crankcase.

If the oil feed and the oil return at the hydraulic solenoid valve is interrupted while one chamber is being filled (middle position of the valve), the adjuster stops in the position it has just reached. The chambers lose oil due to leakage so that the adjuster leaves its position. The hydraulic solenoid valve is actuated accordingly through the DME and the adjuster returns to the desired position again.

Hydraulic Solenoid Valve

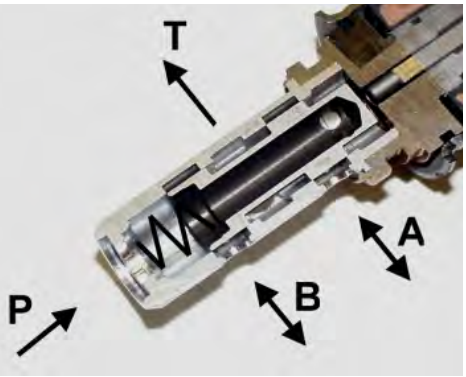

The hydraulic solenoid valve is designed as a four-way proportioning valve and, depending on the setting from the DME, opens one of the two control lines (A/B) to the oil pressure supply line (P) and opens the other line to allow the oil to flow out to return to the crankcase (T-line). If oil pressure is applied to the A-line, the adjuster is rotated in the direction of early. If oil pressure is applied to the B-line, the adjuster is rotated in the direction of later timing. In the middle position both control lines are closed. The camshaft is held in the interim position.

So, it is not only possible to adjust the position very quickly, but also very slowly in the event of minor deviations of the valve from the middle position.

Notes:

Non-Return Valve

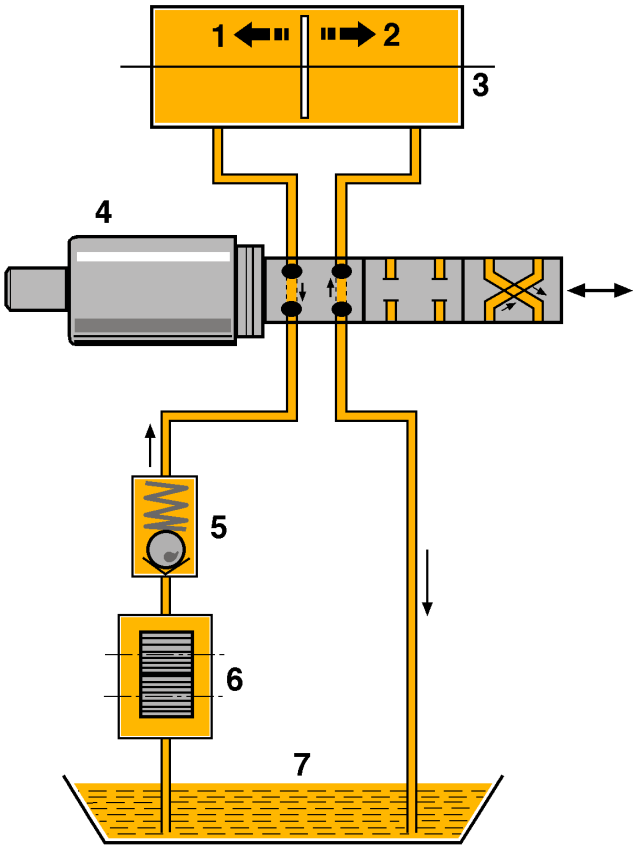

1 - Adjustment Direction Late
2 - Adjustment Direction Early
3 - Camshaft Adjuster
4 - Hydraulic Solenoid Valve
5 - Non-return Valve
6 - Oil Pump
7 - Oil Pan

Occasionally the camshaft requires high drive torque for valve operation, at other times the camshaft continues to run independently (alternating torque). If a non-return valve is placed in the P-line and current is applied to the hydraulic solenoid valve (adjustment toward early valve timing) with the camshaft advancing, the adjuster sucks oil by itself through the feed line, the hydraulic solenoid valve and the non-return valve. If the camshaft then wants to lag behind because of the high drive torque, the non-return valve closes and the oil cannot escape. During this time the camshaft is driven through the oil cushion by the sprocket, as happens when it is free-wheeling. The camshafts repeatedly advance and are then driven, so that the camshaft gradually runs at early valve timing by itself.

Since the principle just described works only with very tightly sealed adjuster systems and low friction valve gear, oil pressure is required. To avoid the need for an extremely large oil pump, the principle described can be taken advantage of with a hot engine and low oil pressure by using the non-return valve. The non-return valve serves to increase adjustment speed under conditions of low oil pressure.

Notes:

Cayenne S Oil Circuit

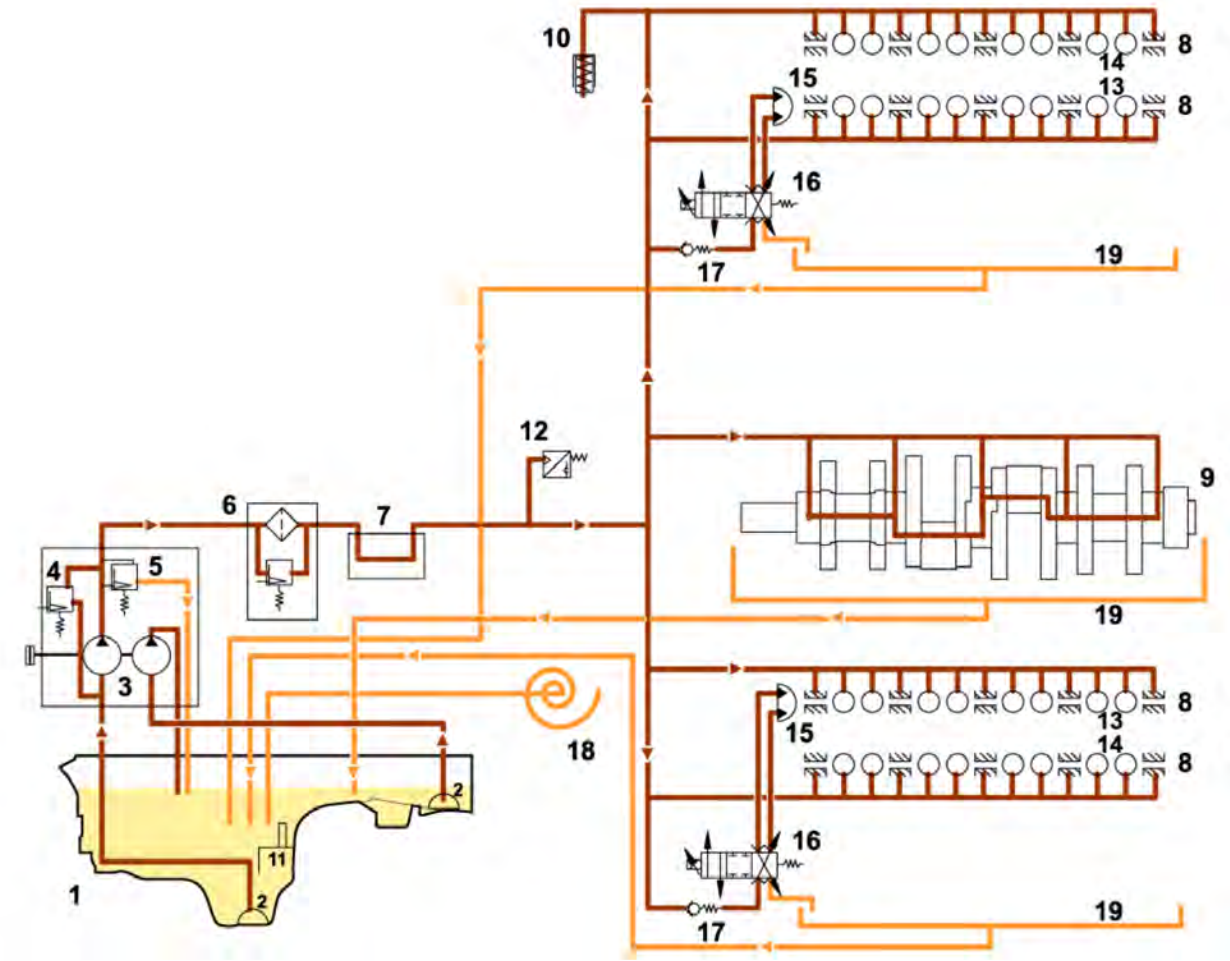

Pressurized Oil

Oil Return

1 - Oil pan
2 - Suction tube with screen
3 - Oil pumps
4 - Control valve (regulates oil pressure to about 5 bar)
5 - Safety valve (opens at 10 bar)
6 - Full-flow oil filter with pressure relief valve
7 - Oil to water heat exchanger
8 - Camshaft
9 - Crankshaft
10 - Chain tensioner
11 - Oil level detector and oil temperature sensor
12 - Oil pressure sensor
13 - Hydraulic lifters, intake
14 - Hydraulic lifters, exhaust
15 - Camshaft adjuster
16 - Hydraulic solenoid valve
17 - Non-return valve
18 - Oil mist separator
19 - Oil return passages

Cayenne Turbo Oil Circuit

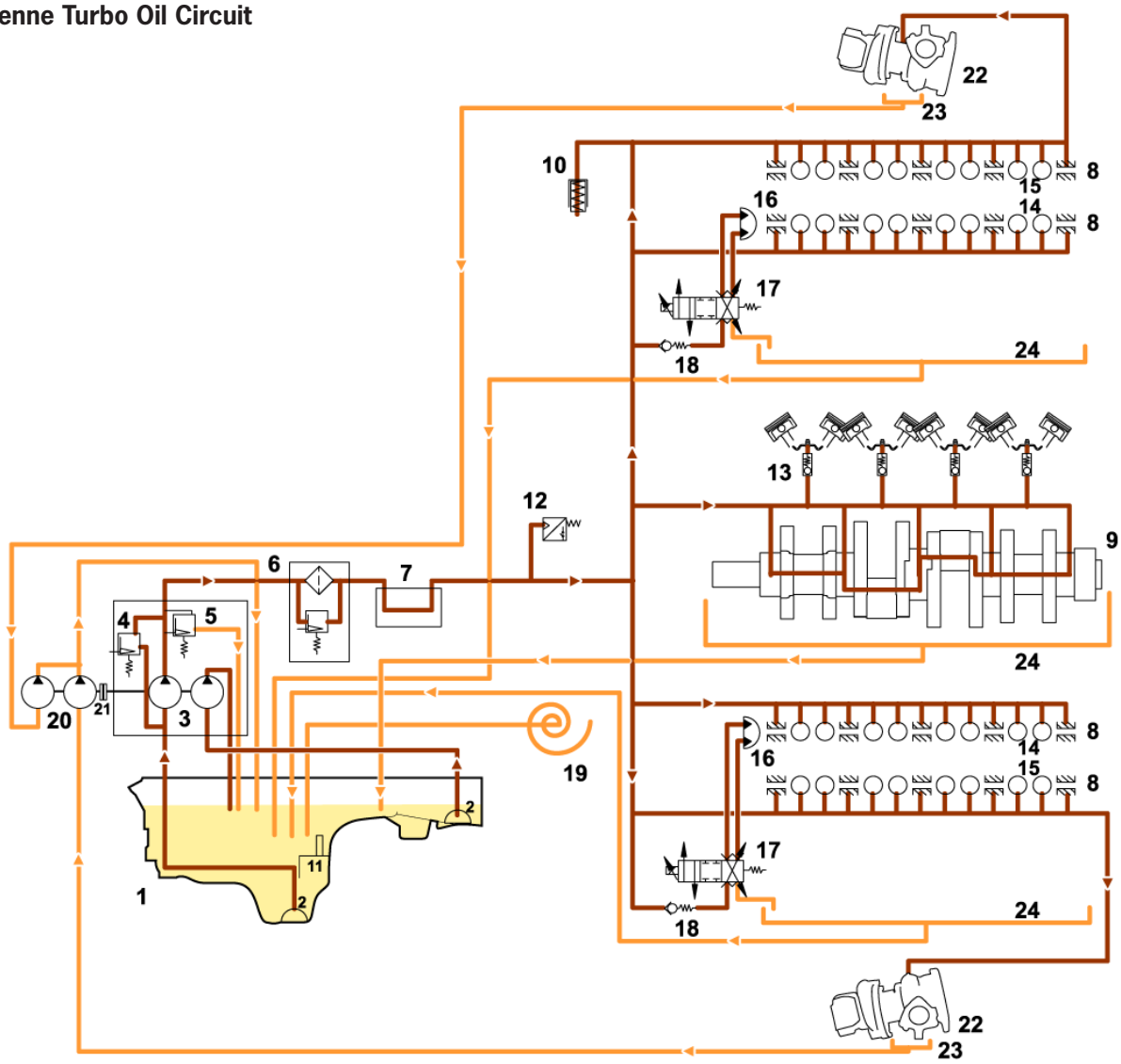

Pressurized Oil **Oil Return**

1 - Oil pan
2 - Suction tube with screen
3 - Oil pumps
4 - Control valve (regulates oil pressure to about 5 bar)
5 - Safety valve (opens at 10 bar)
6 - Full-flow oil filter with pressure relief valve
7 - Oil to water heat exchanger
8 - Camshaft
9 - Crankshaft
10 - Chain tensioner
11 - Oil level detector and oil temperature sensor
12 - Oil pressure sensor
13 - Piston oil spray nozzle (opening pressure 1.8 bar)
14 - Hydraulic lifter, intake
15 - Hydraulic lifter, exhaust
16 - Camshaft adjuster
17 - Hydraulic solenoid valve
18 - Non-return valve
19 - Oil mist separator
20 - Suction pump, turbocharger
21 - Equalizer clutch
22 - Turbocharger
23 - Suspended oil container
24 - Oil return passages

Oil Spray Jets

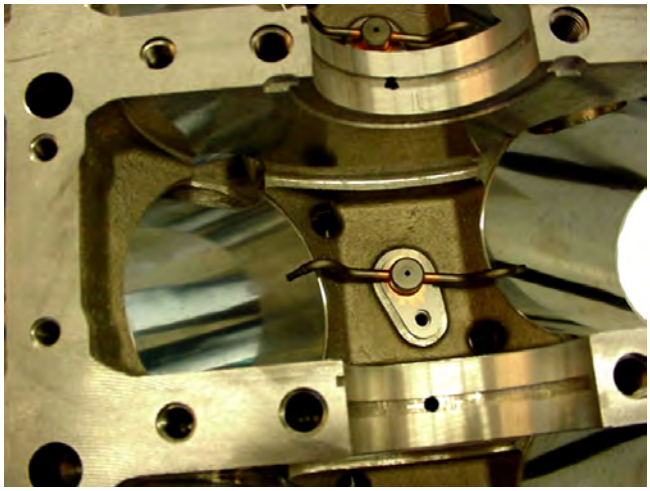

Oil Spray Jets

To reduce piston temperatures the engine in the Cayenne Turbo has oil-cooled pistons. The spray nozzles are mounted on the crankcase and spray on the bottom of the piston. To guarantee engine oil pressure at low engine rpm and high engine oil temperatures, opening pressure for the nozzles is set at 1.8 bar.

Oil Pump

To ensure a reliable supply of oil, even under extreme longitudinal and lateral acceleration, as well as in off-road operation on grades/descents and tilt angles up to 45º, integral dry sump lubrication is introduced on the Cayenne. Also, a second suction point is provided in the forward area of the oil pan. A separate bulkhead guarantees an adequate volume of oil in the forward area of the oil pan.

From there the engine oil is carried over the main pickup point to the oil pump and into the oil filter and the oil to water heat exchanger bolted to the oil gallery housing and is finally made available to the lubrication circuit. The oil pump is driven by a chain drive from the crankshaft.

Cayenne Turbo

The Cayenne Turbo receives additional lubrication and suction for the exhaust turbocharger. An additional oil suction pump is provided for this purpose.

Notes:

Cayenne S Crankcase Ventilation

The crankcase is vented though the timing case and into the valve covers. Cast contours in the timing case cover direct the blow-by gases and partially scrape off the oil slung off the timing chain. This causes an advanced separation of engine oil to reduce the load on the ventilation system.

In addition, the blow-by gases are carried by way of the crankcase and the cylinder heads into the valve covers. Here further separation of the engine oil takes place by means of an integral intermediate panel. From there the oil vapors are taken through a spiral oil separator then taken over a pressure control valve behind the throttle valve to the intake system. To ensure the efficiency of the ventilation system in off-road operation, an additional connecting line was used between the valve covers.

Cayenne Turbo Crankcase Ventilation

To meet the turbo-specific requirements for the crankcase ventilation system, separate ventilation paths were provided for the intake and boost pressure areas. In the intake area, ventilation takes place similar to the Cayenne S, so non-return valves are installed between the pressure control valve and the injection point in the intake system.

When boost pressure builds up, the ventilation system switches over by way of the non-return valves, and the gases are injected ahead of the compressor stage of the turbocharger. In addition, the ventilation for the oil catch container is connected to the ventilation system.

Oil Filter

A replaceable cartridge is used as the oil filter. Oil capacity is 8.5 liters (approx 9 quarts). The engine oil change interval for the Cayenne S and the Cayenne Turbo is 20,000 miles (30,000 km).

Notes:

Oil Level and Temperature Sensor

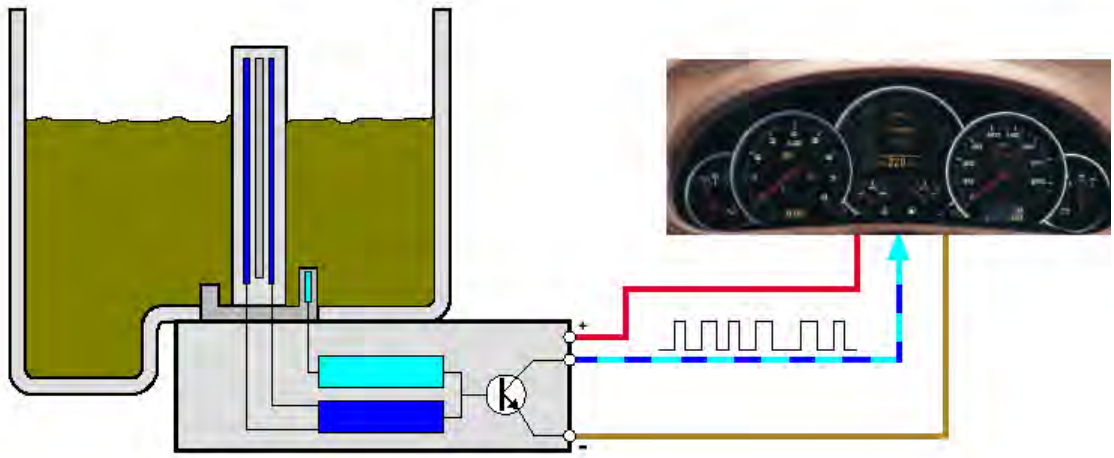

The Cayenne uses a new oil level and temperature sensor. The sensor bolts into the oil pan and sends oil level and temperature information to the instrument cluster.

The oil level/oil temperature sender is a thermal oil level sensor. While the engine is running, the engine oil temperature is continuously measured and the engine oil level is calculated. Both parameters are sent via a common pulse-width modulated signal to the instrument cluster.

A separate temperature sensor with integrated electronics detects the oil temperature. The measuring element for oil level also works with temperature measurement. The electronics therefore heat it up quickly above the current oil temperature. After the heater voltage is switched off, the measuring element is cooled down by the engine oil to the oil temperature level. The oil level is calculated from the length of time of the cooling phase.

long cooling phase	low oil level
short cooling phase	normal

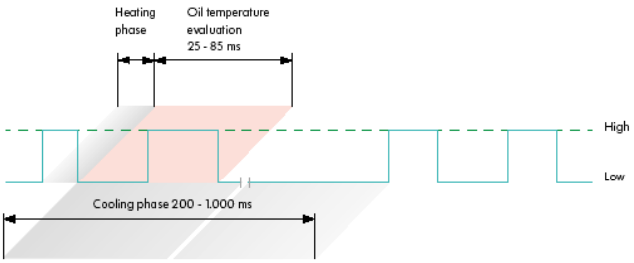

The signal indicates the heating phase as high voltage and the cooling phase as low voltage. During the cooling phase, engine oil temperature information is transferred as a separate high signal.

Notes:

Cooling System

Coolant is circulated by the water pump (15) through a plastic pipe located in the internal V of the engine to the distribution pipe (12) on the transmission side of the engine. The coolant flow is separated in the distribution pipe, about 20% of the coolant is fed into the water jacket of the crankcase and passes through it in the longitudinal direction. About 80% of the coolant volume is fed into the cylinder heads on the cross-flow principle to achieve optimal temperature distribution and passes through them from the hotter (outlet) to the cooler side.

Ahead of the thermostat housing (3) the coolant flows are brought together again, and, with the thermostat closed (reduced circulation), taken directly to the water pump again.

The thermostat starts to open at 181° F (83° C), lift is 9.8 mm at 208° F (98° C), and it reaches its maximum opening at 221 F (105° C). Coolant temperature is measured at the engine block inlet. With the thermostat open (full circulation), the coolant is brought by way of the radiator at the front of the vehicle back to the intake side of the water pump.

Heat from the engine oil is given off (2) into the coolant by means of an oil to water heat exchanger. Partial volume flow for this and the liquid-cooled alternator (4) are diverted at the distribution pipe. Volume flow for heater core is taken off at the thermostat housing. The return for both flows is into the thermostat housing.

A supplementary electrical run-on pump (7) provides circulation in the coolant circuit even after the engine has been switched off. Depending on coolant temperature and the last driving cycle (map derived from fuel consumption) this pump is actuated by the DME control unit through a relay.

On the Cayenne Turbo the two turbochargers (5 and 11) additionally have coolant directed around them. This greatly reduces oil coking in the turbine bearing housing.

Notes:

Cayenne S Coolant Circulation

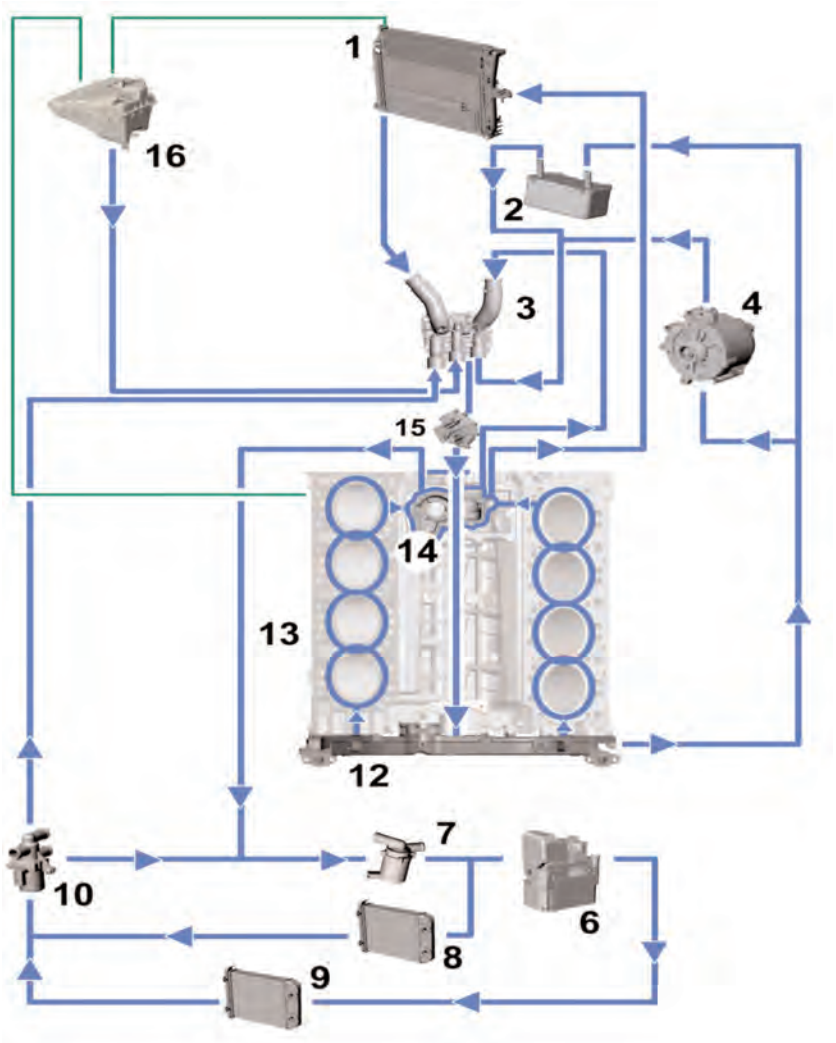

Ventilation Line Coolant Line

1 - Radiator
2 - Oil to water heat exchanger
3 - Thermostat housing
4 - Alternator
6 - Auxiliary heating
7 - Electrical run-on pump
8 - Rear heater core
9 - Front heater core
10 - 3/2-way valve
12 - Coolant distribution pipe
13 - Engine
14 - Coolant collection pipe
15 - Water pump
16 - Coolant overflow reservoir

Cayenne Turbo Coolant Circulation

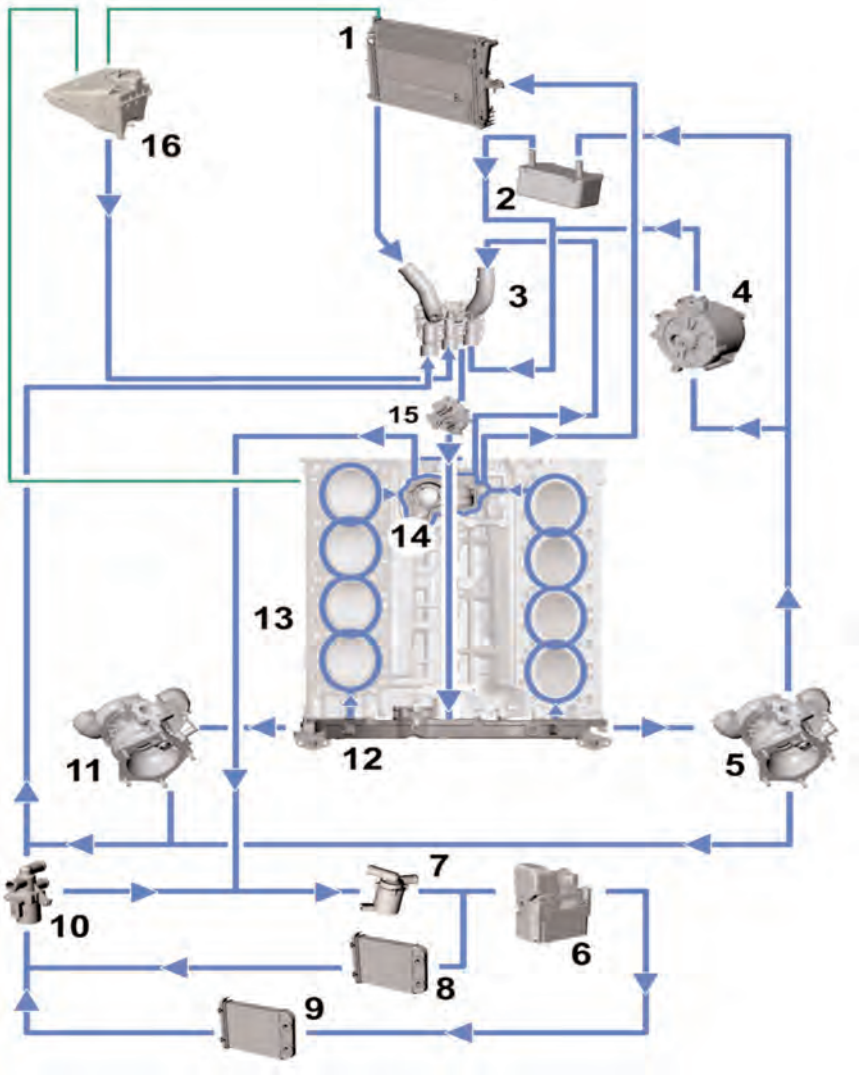

Ventilation Line Coolant Line

1 - Radiator
2 - Oil to water heat exchanger
3 - Thermostat housing
4 - Alternator
5 - Exhaust turbocharger
6 - Auxiliary heating
7 - Electrical run-on pump
8 - Rear heater core
9 - Front heater core
10 - 3/2-way valve
11 - Exhaust turbocharger
12 - Coolant distribution pipe
13 - Engine
14 - Coolant collection pipe
15 - Water pump
16 - Coolant overflow reservoir

Engine – Cayenne S/T – 1st Generation

Service Position

The Cayenne has an added feature of allowing the front end to be moved forward into a service position for maintance and repair. The service position can be achieved without draining the fluids or air conditioning system refrigerant.

Engine Removal

In the event that the engine needs to be removed,a new special tool has been provided. The lifting table will safely remove the engine, transmission, transfer case and sub frame as an assembly. The lifting table will have the ability to be converted for use on the 911 Carerra (996) and Boxster models.

Notes:

Subject **Page**

General 3
Cayenne Engine Data 3
Crankcase, Crankshaft 4
Vibration Damper 5
Connecting Rods and Pistons 5
Cylinder Head 5
Cylinder Head Gasket 6
Timing With Variable Camshaft Control 6
Camshafts 7
Belt Drive 10
Belt Tensioner 10
Oil Lubrication System 11
Oil Pump and Oil Pan 12
Crankcase Ventilation 13
Oil Filter 13
Cooling System 14

Notes:

General

In addition the 4.5 liter V8 naturally-aspirated and turbo engines, the Porsche Cayenne now has a third engine option. The 3.2 liter V6 gasoline engine offers a wide engine speed range with high power output and the long stroke creates high torque at low RPMs while maintaining good consumption and emission values.

Important features of the engine are:

- Weight-optimized grey cast iron crankcase (15° V)
- One-piece die-cast aluminum cylinder head
- Four valves per cylinder, operated via roller cam followers
- Continuously variable intake/exhaust camshaft timing
- Wet-sump lubrication
- Oil-spray piston cooling
- Oil-to-coolant heat exchanger
- Inclinations up to 45° to all sides possible
- Longitudinal cooling flow of cylinder head and crankcase

Full-load Curve Cayenne

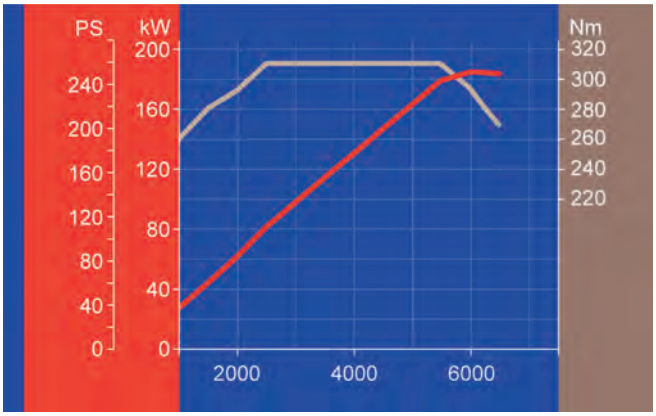

Engine Data

Engine Type	M02.2Y (BFD)
No. of Cylinders	6
Bore	84.0 mm
Stroke	95.9 mm
Displacement	3.2 Liter
Compression Ratio	11.5
Max. Power	250 HP (184 kW)
At Engine Speed	6000 rpm
Max. Torque	229 ft lb (310 Nm)
At Engine Speed	2500 - 5500 rpm
Governed Speed	6700 rpm
Engine Weight with M/T)	423 lbs (192 kg) (w/dual-mass flywheel, w/o clutch)
Engine Weight (Tiptronic)	397 lbs (180 kg) (with converter plate)
Firing Order	1 – 5 – 3 – 6 – 2 – 4

Notes:

Crankcase

The weight-optimized crankcase with the cylinders is manufactured from grey cast iron. The cylinders are arranged in a “V” at an angle of 15°, cylinder number 1 is located on the front passenger side. Bores are at 7.5° to gasket face.

Arrow shows the direction of travel.

Crankshaft

The drop-forged crankshaft is carried on seven bearings. Main bearing number 4 is designed as an axial-thrust bearing. The axial clearance is determined by two axial-thrust washers, which are seated in the bearing pedestal. The bimetal main bearings have a diameter of 60 mm.

Main bearing cap number 4.

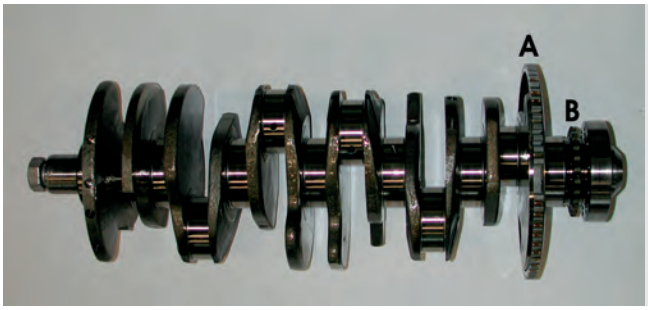

The pulse generator wheel for the engine speed and reference mark sender (A) along with the chain drive sprocket for the intermediate shaft (B) are on the crankshaft.

Notes:

Bearing Assignment

Markings are provided on both the crankcase and the crankshaft to indicate which bearing tolerances are installed.

Torsional Vibration Damper

A torsional vibration damper is used to reduce torsional vibration at the crankshaft reduce component stress.

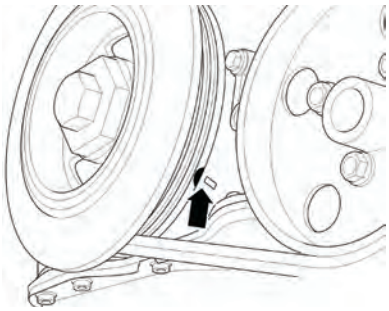

The torsional vibration damper has a TDC marking (arrow).

Connecting Rods and Pistons

The connecting rod upper and lower halves each have a pairing number and are secured with reamed bolts. The bimetal connecting rod bearings have a diameter of 54 mm.

The pistons are alloy cast and are Graphal coated on the sliding surfaces to reduce noise. The full-floating wrist pin is lubricated with oil spray.

Cylinder Head

The cylinder head is manufactured in one-piece from die-cast aluminum. The timing of the charge exchange takes place through four valves per cylinder, which are operated via roller cam followers with hydraulic valve clearance adjusters. The two intake and two exhaust valves are arranged in a “V” at a valve angle of 42.5°. The diameter of the valve head is 33.2 mm on the intake side and 30.2 mm on the exhaust side.

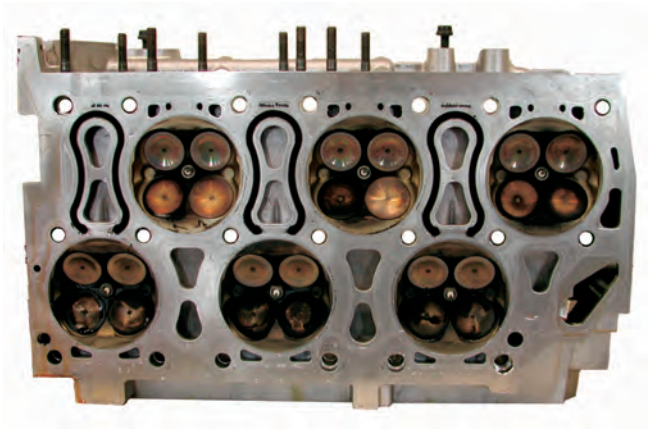

Cayenne V6 Cylinder Head

Cylinder Head Gasket

The cylinder head gasket consists of a sheet-metal layer, onto which a plastic coating is applied. This elastomer-coated (temperature-resistant, rubber-elasticized plastic) ensures a high quality seal in the water jacket areas. Additionally, this elastomer coating provides insulation of noise radiation upwards and reduces mechanical noise.

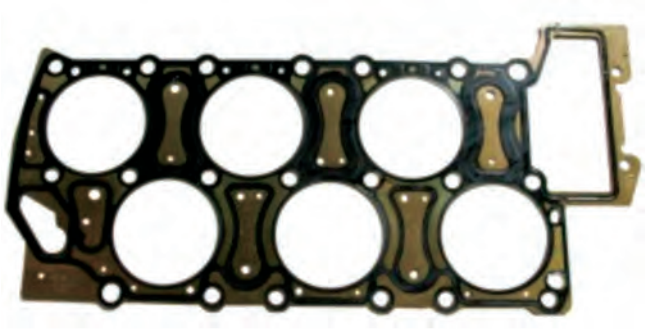

Notes:

Timing With Variable Camshaft Control

Chain Drive

Engine timing takes place through two chain drives located at the flywheel end. Driven by the crankshaft (5), the lower chain drive drives the intermediate shaft and the chain sprocket for the upper chain drive. The intermediate shaft drives the oil pump. The upper chain drive drives both camshafts (1). It is designed as a duplex chain, due to the transmission ratio of crankshaft to camshaft (2:1), it has a greater torque to transmit than the lower chain drive.

Chain tensioning is provided by two maintenance-free chain tensioners (6 and 7). They are connected to the engine oil circuit. For assembly and valve timing purposes, one tooth of the crankshaft sprocket (4) and the large intermediate shaft sprocket (2) are marked. The camshafts are set using an adjusting fixture.

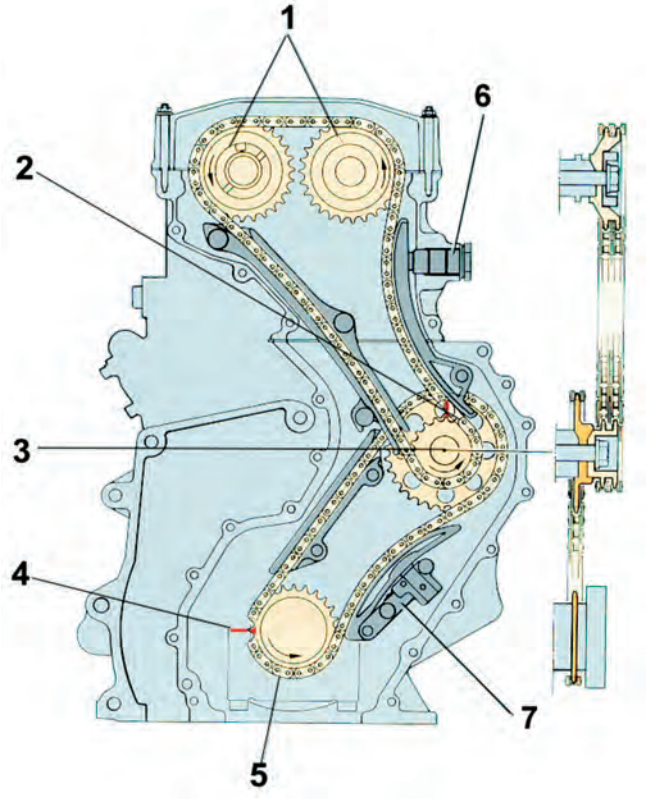

1 - Camshafts
2 - Marking on intermediate shaft sprocket
3 - Intermediate shaft
4 - Main bearing separation
5 - Crankshaft
6 - Chain tensioner, upper
7 - Chain tensioner, lower

The upper chain tensioner is connected to the engine oil circuit and is actuated hydraulically.

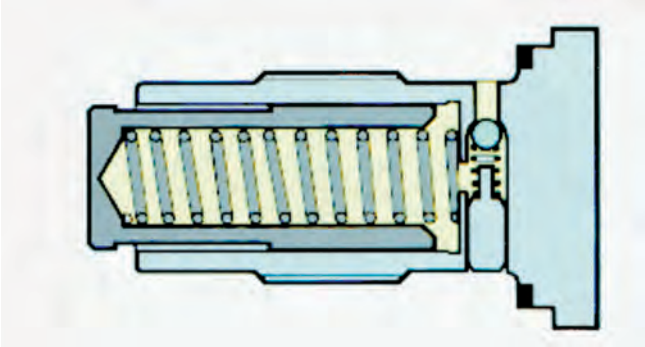

Upper Chain tensioner

Chain tensioning at the bottom is determined by the spring force of the chain tensioner. Together with the oil pressure, the spring prevents vibration of the chain during operation. The stop provides the basic setting of the chain when the engine starts.

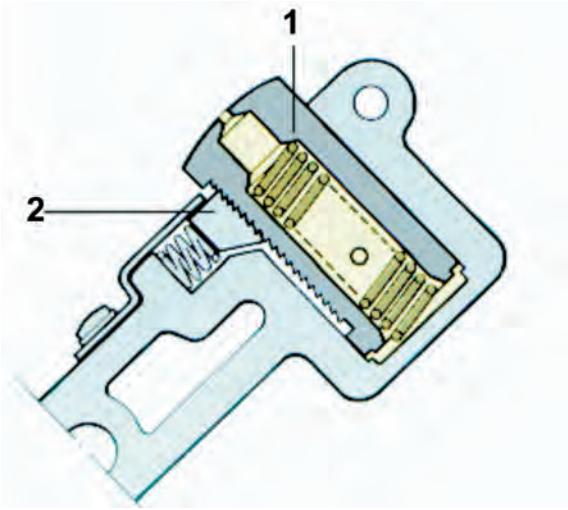

1 - Spring
2 - Stop

Camshafts

The camshafts are not cast in one piece, but are made up of hollow shafts and cams. The cams are pushed onto a hollow shaft and the shaft is then hydraulically expanded thereby securing the cams.

The advantages of this are that the weight can be reduced and the materials for the shaft and the cams can be independently selected. This also reduces the production costs. The cam lift of the intake and exhaust camshaft is 10 mm.

Notes:

Variable Camshaft Control

General

The variable camshaft control of the inlet and exhaust shaft is based on the principle of the vane cell adjuster. The control unit determines the current position of the camshaft in relation to the crankshaft (actual angle) using the engine speed and hall sensor signal. The position control in the control unit receives the desired angle via the programmed map values (engine speed, load, engine temperature). If the desired angle and actual angle differ, a controller in the DME control unit actuates a solenoid hydraulic valve according to the desired position. The adjustment angle is 52° crankshaft angle on the intake side and 22° on the exhaust side.

Operation

When **idling**, the inlet camshaft is adjusted so that the inlet valves open late and consequently close late. The exhaust camshaft is adjusted so that the exhaust valves close well before TDC. This results in a stable idling speed due to the low residual gas content during combustion.

To achieve good **performance** at high engine speeds, the exhaust valves are opened late. This allows the combustion expansion to act on the piston longer. The intake valve opens after TDC and closes late after BDC. This utilizes the dynamic ram effect of the incoming air to increase power output.

To produce maximum **torque**, a high volumetric efficiency of the cylinders must be achieved. For this, the intake valves must be opened early. Since they open earlier, they also close earlier, which prevents expulsion of the fresh gases. The exhaust valve closes shortly before TDC.

During the adjustment of the intake and exhaust camshafts, an internal exhaust **gas recirculation** takes place. This produces an exhaust gas transfer from exhaust to intake port during valve overlap (inlet and exhaust valves are open). The amount of recirculated exhaust gas during the internal exhaust gas recirculation is determined by the amount of valve overlap. Therefore, the intake camshaft is adjusted so that the intake valves open well before TDC and the exhaust valves close shortly before TDC. Consequently, both valves are open and exhaust gas is recirculated.

Notes:

Camshafts

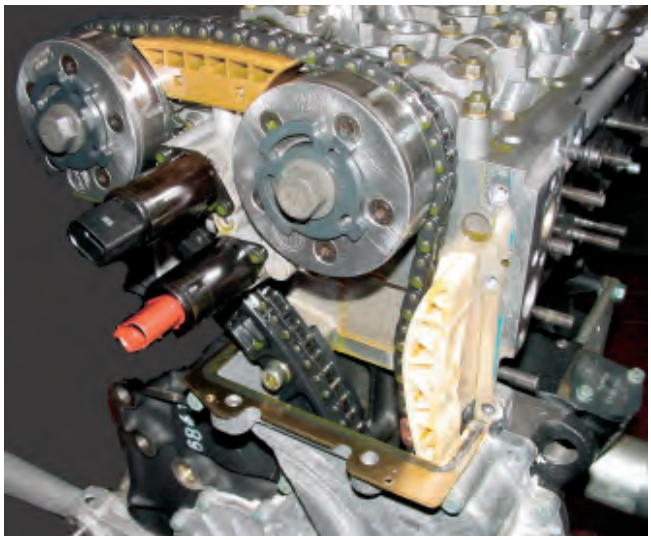

The variable camshaft control system consists of the following components:

- Two vane cell adjusters
- Timing case
- Two electromagnetic valves

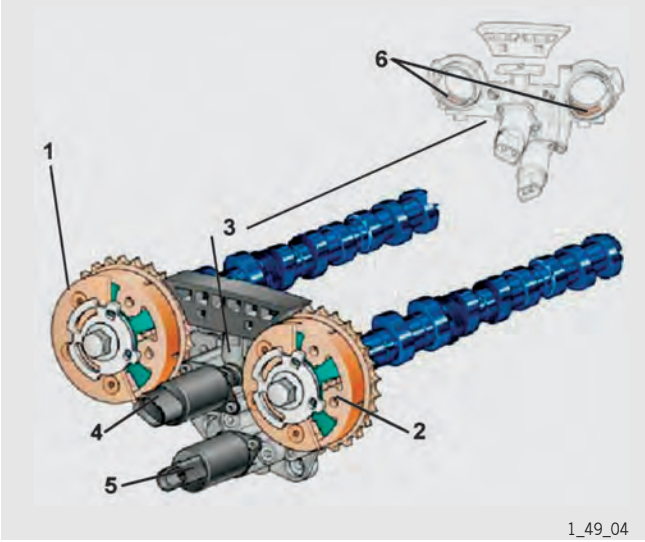

Camshaft Drive Components

1 - Vane cell adjuster, intake camshaft
2 - Vane cell adjuster, exhaust camshaft
3 - Timing case
4 - Valve for variable camshaft control, intake
5 - Valve for variable camshaft control, exhaust
6 - Oil channels to annular groove of camshafts

The Motronic control unit actuates electromagnetic valves 4 and 5 to adjust the camshafts. They open oil channels in the timing case. The engine oil then passes through the timing case and the camshaft into the vane cell adjusters. The vane cell adjusters turn thereby adjusting the camshafts according to the settings of the Motronic control unit.

Notes:

Belt Drive

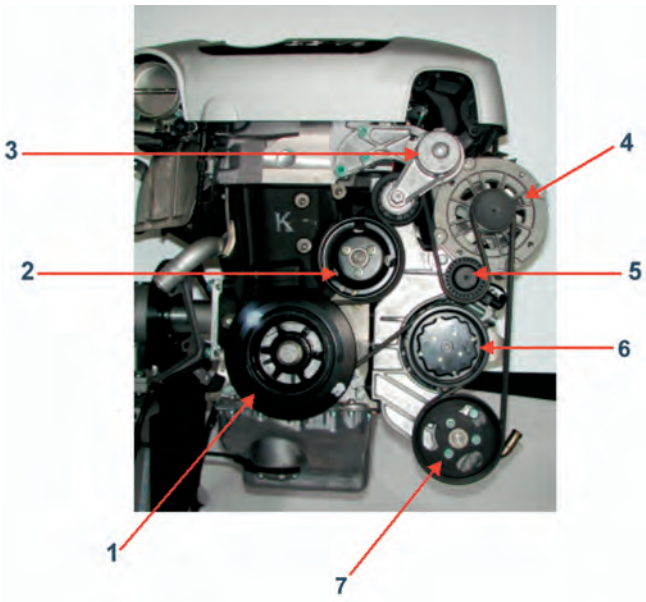

Belt Drive Components

1 - Torsional vibration damper
2 - Coolant pump
3 - Belt tensioner
4 - Alternator
5 - Idler pulley
6 - Air-conditioning compressor
7 - Servo pump

Belt Tensioner

The alternator, coolant pump, servo pump and air-conditioning compressor are driven via a poly-rib belt from the torsional vibration damper. The correct tension is maintained throughout by a maintenance-free, mechanical belt tensioner.

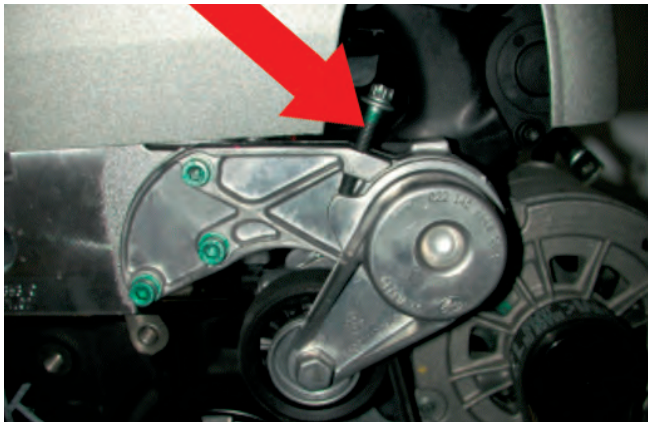

Maintenance-Free Belt Tensioner

Notes:

Oil Lubrication System

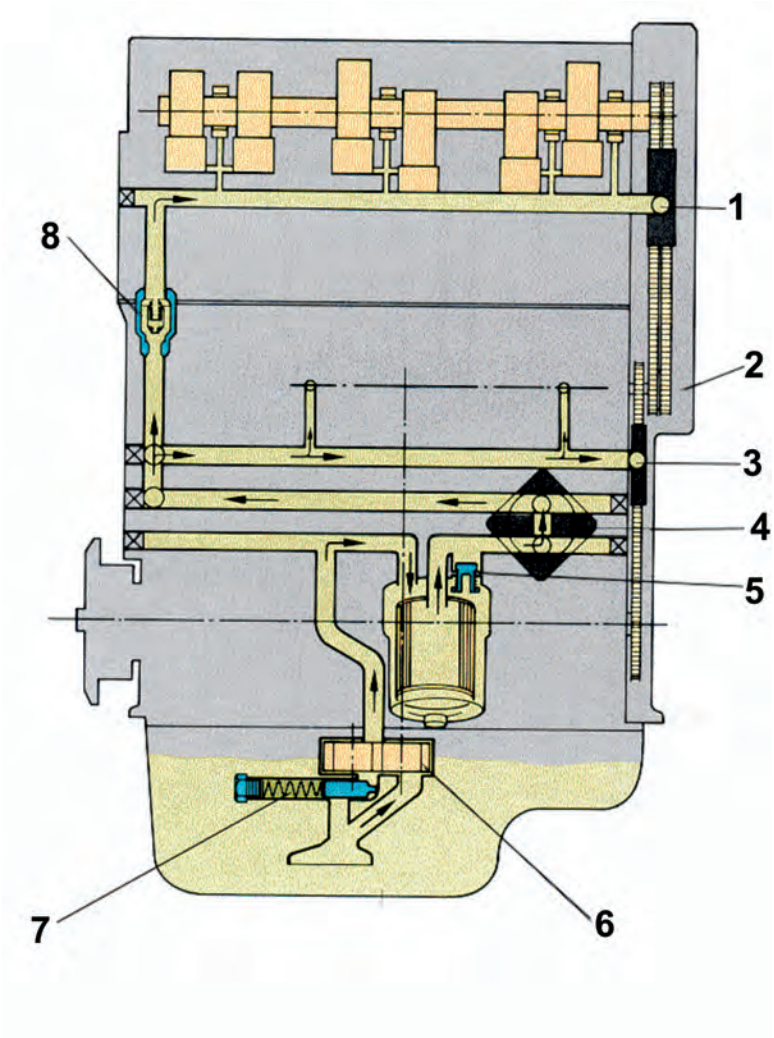

1 - Upper chain tensioner
2 - Intermediate shaft
3 - Lower chain tensioner
4 - Oil-to-water heat exchanger
5 - Bypass valve
6 - Oil pump
7 - Pressure relief valve (opens at 5.5 bar)
8 - Oil retaining valve

Notes:

Oil Pump

The oil pump is a gear-type pump. The casing also contains the oil pressure control valve, which opens at 80 psi (5.5 bar).

Oil Pump

The oil pump is driven via a chain drive from the crankshaft to the intermediate shaft (1) and from there via a right-angle drive to shaft (3). The oil pump drive shaft (2) is hexagonal at both ends and drives the oil pump gear. The casing is closed and sealed by the cover (4). The cover also serves as a mount for the shaft (3).

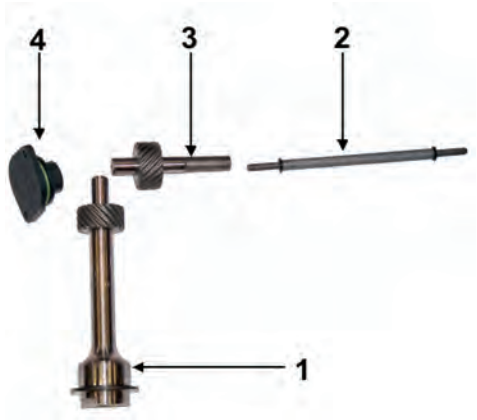

Oil Pump Drive

Notes:

Oil Pan

Oil Pan

The Porsche Cayenne V6 has a wet-sump lubrication system developed for reliable operation under extreme conditions, as well as off-road capability at inclinations up to 45° to all sides. For this reason, the oil pan shape and the form of the ribs and oil baffles have been optimized to ensure a constant oil return to the oil pump at 45° inclinations and to minimize oil foaming through spraying oil and churning losses.

Oil Level Warning

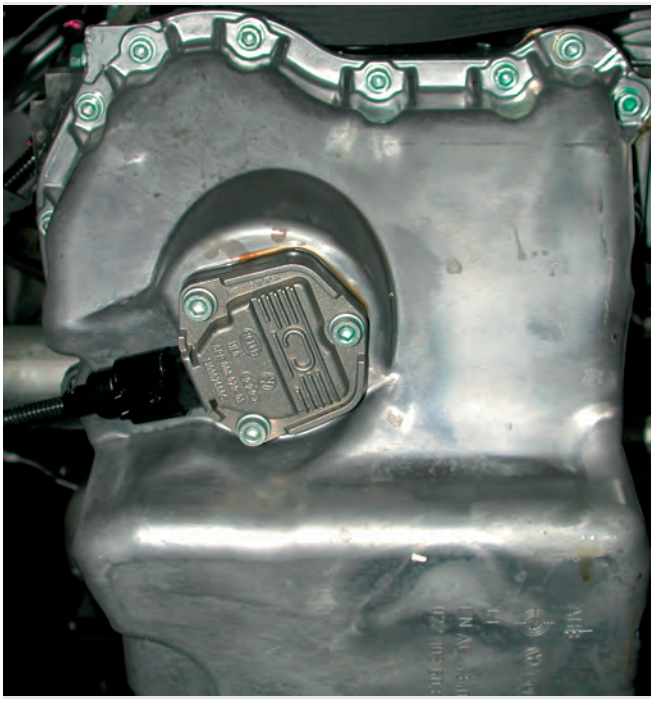

Oil Level Warning Sensor

An oil level warning device is fitted at the bottom of the oil pan. If the oil level drops too low, this is indicated on the instrument cluster with the appropriate warning.

Oil Pressure Switch

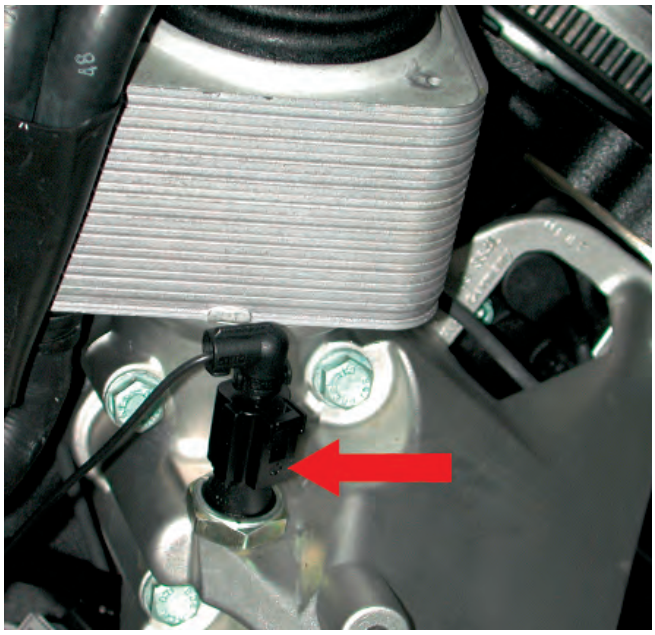

Oil Pressure Switch (Arrow)

The oil pressure switch is located on the oil filter bracket and indicates on the instrument cluster if the oil pressure falls below a specified value.

Oil-Spray Piston Cooling

The Cayenne engine has oil-spray piston cooling to reduce the piston temperature. The spray jets are located in the main bearing pedestals. To ensure that the engine oil pressure is maintained at low engine speeds and high engine oil temperatures, the jets have an opening pressure of 29 psi (2 bar).

Crankcase Ventilation

Crankcase ventilation takes place via the timing case cover in the rocker cover. Design of the timing case cover prevents oil from being pulled along over the timing chain. This preseparation of the engine oil relieves the load on the ventilation system.

The oil vapor is also channeled through a stabilizing chamber in the rocker cover. At this point the engine oil is separated via an integrated condensation chamber. From there, the crankcase gases are channeled via a pressure control valve to the throttle valve of the intake system. To prevent freezing of the gases at extremely cold temperatures and high humidity levels, the inlet into the intake manifold is heated depending on the outside temperature. This ensures effective operation of the ventilation system throughout the entire operational range of the engine, including under extreme off-road conditions at inclinations of up to 45°.

Oil Filter

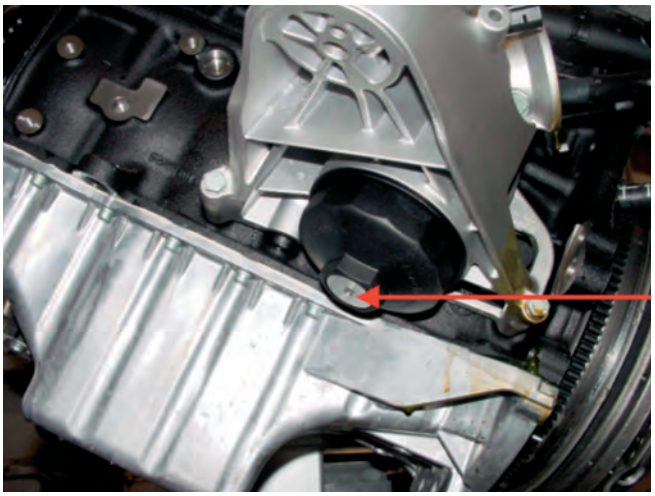

Oil Filter Cartridge Drain Plug (Arrow)

The oil filter is in the form of a replaceable filter cartridge. This is located on the mounting bracket and is removed from below. The oil can be drained from the cartridge via a drain plug.

Oil change volume without filter is 6.3 qts. (5.7 liters), 7 qts. (6.3 liters) with filter.

Notes:

Cooling System

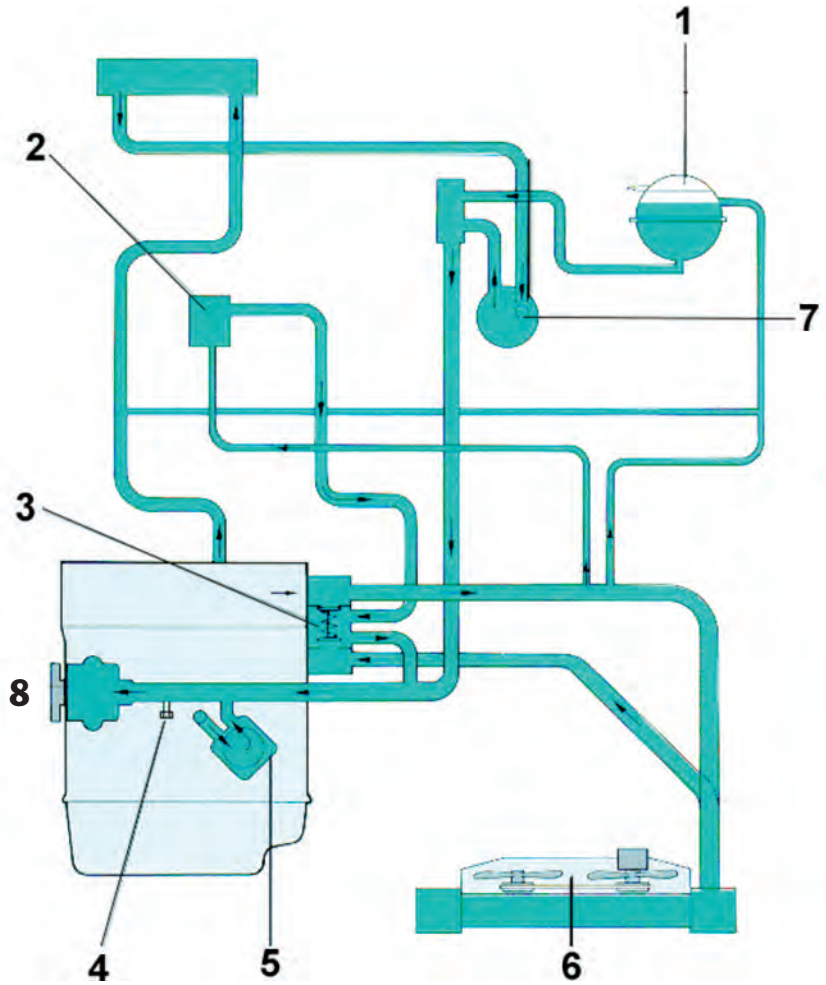

1 - Expansion tank
2 - Throttle valve element
3 - Thermostat
4 - Coolant drain screw
5 - Oil-to-water heat exchanger
6 - Radiator with fan
7 - Crankcase vent
8 - Coolant pump

Coolant is passed from the coolant pump via the crankcase to the cylinder head. The coolant flows through the cylinder head longitudinally. From the cylinder head coolant flows to the thermostat housing, when the thermostat is closed, directly back to the coolant pump. At temperatures > 176° F. (80° C), the coolant is directed through the radiator at the front of the vehicle and back to the pump.

The coolant pump has been appropriately adapted with regard to efficiency and flow to cope with the high thermal loading of the cooling circuit when towing a trailer in hot climates. To ensure even distribution of temperature in the engine, the coolant, depending on the engine temperature, continues to be circulated by an electric post-run coolant pump according to the load profile present before the engine was switched off.

The coolant (identical to Cayenne S and Cayenne Turbo) is intended to be a lifetime fill and therefore does not require replacement. The filling capacity is approx. 14 - 20 qts. (13 - 18 liters) depending on equipment.

Notes:

Subject **Page**

General 3
Cayenne S Engine Data 3
Cayenne Turbo Engine Data 4
Crankcase 4
Crankshaft 5
Torsional Vibration Balancer 5
Connecting Rods 5
Pistons 6
Cylinder Head 6
Valves, Valve Springs 10
Vacuum Pump 11
Belt Drive 11
Oil Lubrication System 13
Cayenne S Cooling System 17
Cayenne Turbo Cooling System 18

Notes:

1 - Engine M 48.01/51

General

Completely new engines have been developed for the Cayenne S and Cayenne Turbo for the 2008 model year.

The main development aims were:

- More power and torque, while at the same time,
- Improving fuel economy and,
- Reducing the weight of the engine compared to previous engines.

These development aims have essentially been achieved due to the following enhancements and new technologies:

- Larger displacement
- Direct fuel injection (DFI)
- Sport button as standard
- VarioCam Plus
- Demand controlled oil pump

Cayenne S Full Load Curve

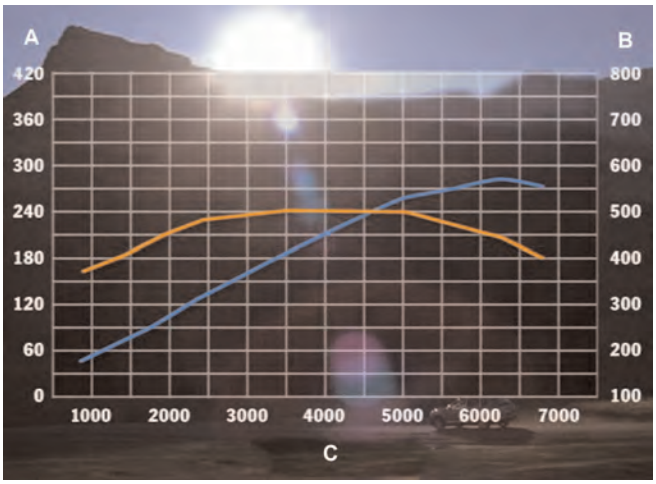

A - Power rating in kW
B - Torque in Nm
C - Engine speed

Engine Data – Cayenne S

Engine Type	M48.01
No. of Cylinders	8
Bore	96 mm
Stroke	83 mm
Displacement	4.8 Liter
V-angle	90
Compression Ratio	12.5
Max. Output	385 HP (283 kW)
At Engine Speed	6200 rpm
Max. Torque	370 ftlb. (500Nm)
At Engine Speed	3500 rpm
Governed Speed	6700 rpm
Engine Weight (manual transmission)	503 lbs (228 kg)
Engine Weight (Tiptronic transmission)	456 lbs (217 kg)
Firing Order	1-3-7-2-6-5-4-8

Notes:

Engine – Cayenne S/T – 2nd Generation

Cayenne Turbo Full Load Curve

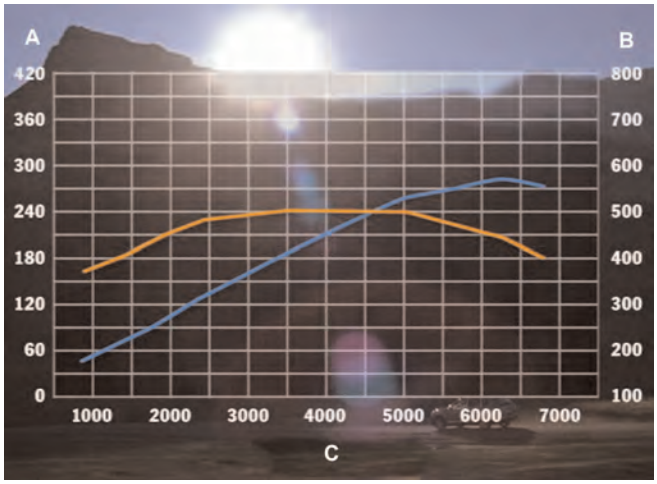

A - Power rating in kW
B - Torque in Nm
C - Engine speed

Engine Data – Cayenne Turbo

Engine Type	M48.51
No. of Cylinders	8
Bore	96 mm
Stroke	83 mm
Displacement	4.8 Liter
V-angle	90
Compression Ratio	10.5
Max. Output	500 HP (358 kW)
At Engine Speed	6000 rpm
Max. Torque	518 ftlb. (700Nm)
At Engine Speed	2250-4500 rpm
Governed Speed	6700 rpm
Engine Weight	520 lbs (236 kg)
Firing Order	1-3-7-2-6-5-4-8

Notes:

Crankcase

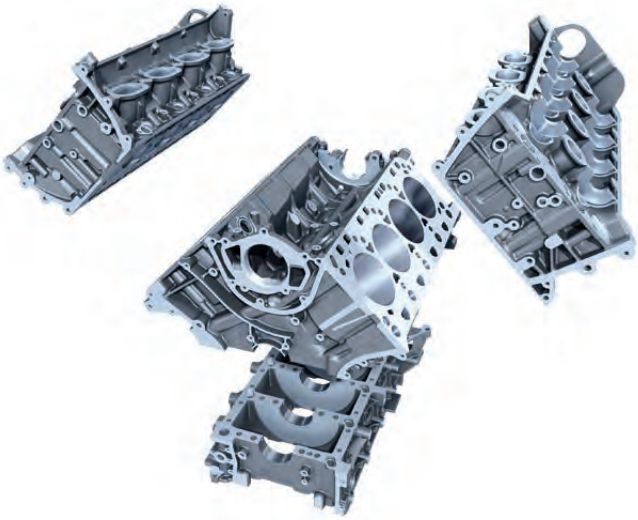

The crankcase in the Porsche Cayenne S and Cayenne Turbo is designed as a two-piece closed-deck component in a light metal alloy (AlSi17Cu4Mg). In the closed-deck design, the sealing surface of the crankcase is, for the most part, closed to the cylinder head, only the bores and channels for oil and coolant are exposed. The entire structure is additionally strengthened as a result of this design. This leads to less cylinder distortions and helps to reduce oil consumption.

The alloy used for the crankcase is known as a hypereutectic alloy in which silicon crystals form. These silicon crystals are exposed using several specialized honing processes in order to make the surface more durable. The crankcase has been lowered by 20 mm compared to the previous engine. As a result, the coolant pump and thermostat housing cover are also 20 mm lower and a modified water flow circuit was required.

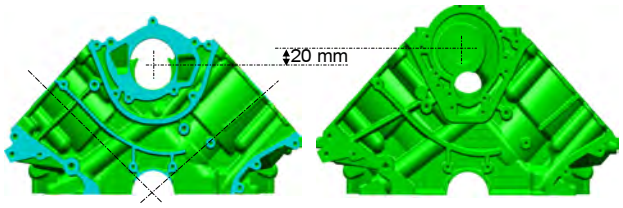

V8 - 4.8 (2nd Generation) V8 - 4.5

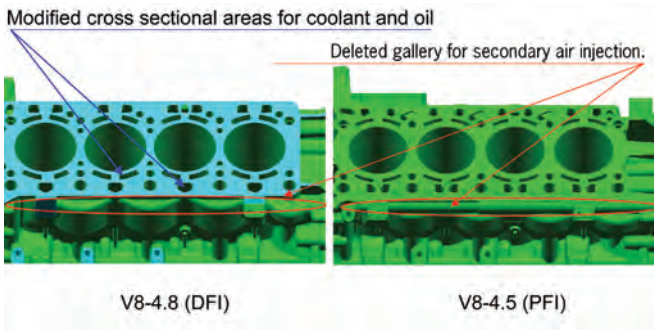

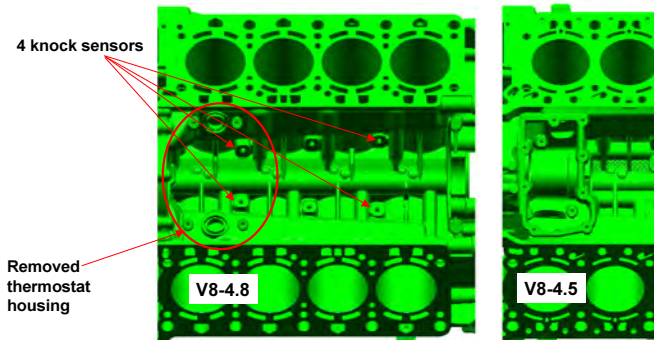

The lower part of the crankcase is machined and paired together with the upper part. To keep the weight as low as possible, the spheroidal graphite iron inserts are no longer used and the wall thickness has been reduced.

A low-pressure chill-casting procedure is used to make the upper and lower part of the crankcase.

Crankshaft

The drop-forged crankshaft runs in five bearings and has eight counterweights. Main bearing 3 is designed as a thrust bearing. Axial play is determined by two thrust washers, which are inserted into the bearing halves. The main bearings are two-component bearings and have a diameter of 64 mm. Since the lower part of the crankcase is made of an all aluminum alloy, the main bearings are stronger than those used previously and the retaining lugs have been changed to avoid confusion. The main bearings are also “lead-free.”

Torsional Vibration Balancer

A torsional vibration balancer is used to reduce torsional vibrations on the crankshaft and to minimize component stress, e.g. on the belt drive. A shock absorber with the very best damping characteristics was selected because of the greater power impulses associated with direct fuel injection engines.

The viscous shock absorber has a floating flywheel in silicon oil in the housing. This allows the counter movement of the bearing mass to a not quite evenly rotating crankshaft.

Connecting Rods

Compared to the 4.5 liter engine, the connecting rods are 2.4 mm longer. This reduces piston lateral runout and is more efficient. The connecting rod bearings are “lead-free” three-component bearings with a diameter of 54 mm. Oil is supplied to the connecting rod bearings via a Y-bore in the crankshaft.

Notes:

Pistons

1 - Piston (naturally aspirated engine)
2 - Piston (turbo engine)

The pistons are designed as recessed pistons made of aluminum alloy. They have an iron coating (Ferrocout) at the sides to improve friction characteristics. The pistons are different on cylinder bank 1 and 2 both in the Cayenne S and Cayenne Turbo. Another difference between the pistons in the Cayenne S and Cayenne Turbo is that the combustion cavities have different depths because the compression ratios of both engines are different. The piston ring packages for the turbo and naturally aspirated engines are the same.

Cylinder Head

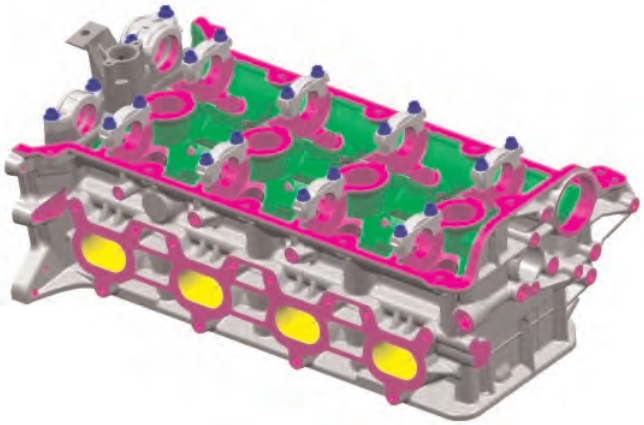

The cylinder head and camshaft mount is one joined component and is identical for the Cayenne S and Cayenne Turbo.

Technical Data, Valve Drive

Intake valve diameter	38.3mm
Intake valve lift, large	11.0mm
Intake valve lift, small	3.6mm
Exhaust valve diameter	33.0mm
Exhaust valve lift, cyl. 3, 4, 5, 7	9.2mm
Exhaust valve lift, cyl. 1, 2, 6, 8	8.0mm
Intake valve angle	13.5°
Exhaust valve angle	15.4°
Fuel injector installation angle	29.0°
Camshaft bearing diameter	28.0mm

To ensure efficient gas exchange and valve lift control, the camshaft mount is 9 mm higher on the intake side compared to the outlet side. This arrangement meant that is was possible to optimize the intake port. The cooling system was designed in such a way that high temperature parts are optimally cooled. The cylinder head is made of AlSi7Mg.

Cylinder head water jacket.

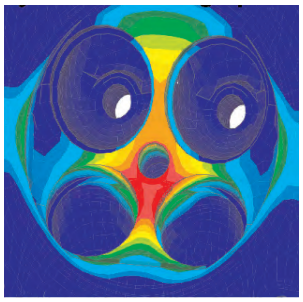

Combustion chamber stress area.

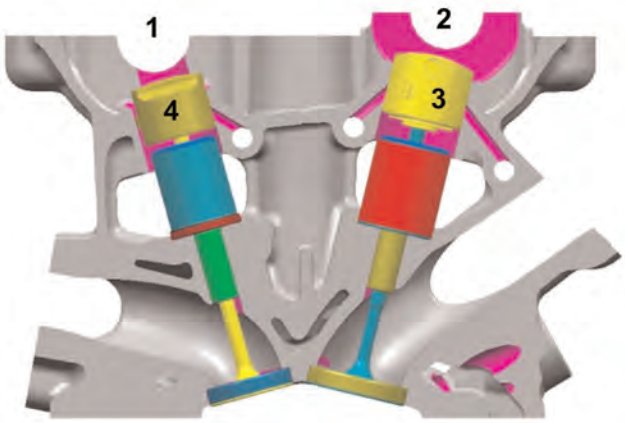

1 - Exhaust side
2 - Intake side
3 - Operating plunger
4 - Outlet valve tappet

Oil Supply in the Cylinder Head

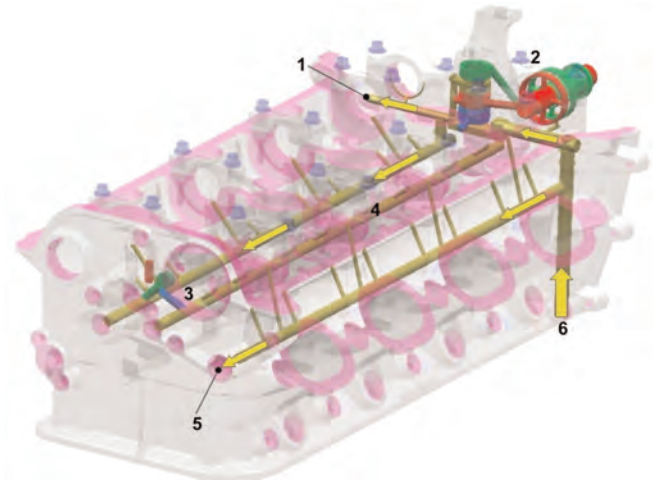

1 - Oil supply to the chain tensioner
2 - Camshaft control system
3 - Valve lift control system
4 - Oil supply for valve lift control
5 - Oil supply for turbocharger
6 - Oil intake

Camshaft Control With Valve Lift Control (VarioCam Plus)

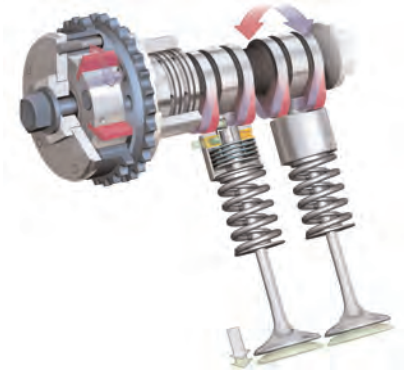

The requirements imposed on engine design with regard to higher performance combined with improved driving comfort, compliance with emission regulations and reduced fuel consumption give rise to conflicting design criteria.

The development of the VarioCam Plus was therefore based on the idea of producing a variable engine, which can be optimized for maximum performance and also for regular driving in city traffic or on secondary roads. A control system for the intake camshaft to vary the opening and closing times in combination with a valve lift system is necessary.

Camshaft Control

Camshaft control on the intake camshaft is based on the principle of a vane controller. The DME control unit determines the current position of the camshaft in relation to the crankshaft (actual angle) on the basis of the speed sensor signal and the Hall sensor signal. The position control in the control unit receives the desired nominal angle via the programmed map values (speed, load, engine temperature). A regulator in the DME control unit activates a solenoid hydraulic valve according to the desired adjustment when there is a difference between the target angle and actual angle. The adjustment angle is 50° in relation to the crankshaft (25° in relation to the camshaft).

Notes:

Vane Controller

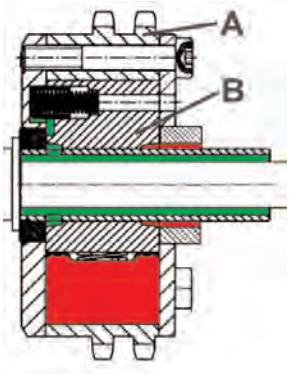

A - Stator
B - Rotor

The vane controller consists essentially of the stator **(-A-)**, which is installed on the crankshaft via the sprocket, the rotor **(-B-)**, which is installed on the camshaft, the inserted vanes and two lids. The sprocket is mounted to the outer diameter of the stator. It is interlocked with the crankshaft via the chain drive. The rotor is screwed securely to the camshaft. Rotation is possible between the rotor and stator (inner mounting of the controller). The rotation is limited by the vanes inserted in the rotor and by the stops on the stator. The vanes also divide the recesses on the stator into two separate chambers.

These chambers can be filled with oil via oil bores and oil passages in the rotor. To guarantee secure sealing, small springs are installed between the vanes and rotor. The chambers are each sealed off at the sides with a lid fixed to the sprocket. The controller is locked at a stop (retarded). To do this, a spring-loaded pin in the retarding device of the controller moves into a bore in the lid. An interlocked connection between the stator and the rotor is created for the engine's starting process. This locking prevents noises during the period before oil pressure is produced.

Function

Two chambers, which act in different directions of flow, are contained in the controller. Filling of one chamber turns the rotor with respect to the stator. The rotor and the camshaft can be turned back into the original position by filling the other chamber. The oil of the non-pressurize chamber flows back into the chamber via the solenoid hydraulic valve.

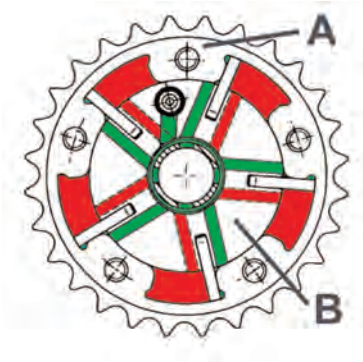

A - Stator
B - Rotor

If the oil supply and the oil return are interrupted at the solenoid hydraulic valve (center position of the valve) during the filling of a chamber, the controller remains at the position just assumed. The chambers lose oil through leakage so that the controller leaves its position. The solenoid hydraulic valve is controlled correspondingly by the control unit, and the controller returns to the desired position.

Solenoid Hydraulic Valve

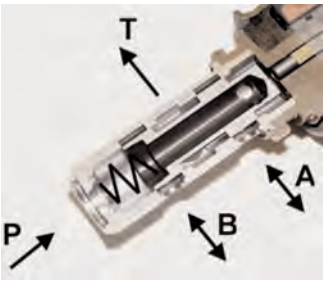

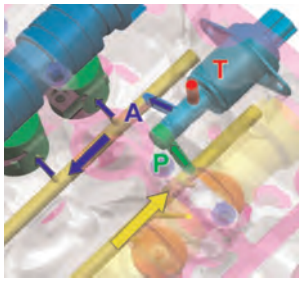

T - Solenoid hydraulic valve
P - Main oil pressure
A - Control pressure

The solenoid hydraulic valve is designed as a 4-way proportional valve, which connects one of the two control lines **(-A/B-)** to the oil pressure supply line **(-P-)** depending on the control unit specification and opens the other line so that the oil can flow into the crank chamber **(-T-line-)**.

If the **-A-** line is pressurized with oil, the controller will change direction to advance the valve timing. If the **-B-** line is pressurized with oil, the controller will change direction to retard the valve timing. Both control lines are closed in the center position. The camshaft is held in the desired position. In addition, any intermediate position between the three switch positions described above can be set via the control unit.

Therefore, it is possible not only to move the adjustment position very quickly but also to move it very slowly in the case of slight deviations of the valve from the central position. In this way, the solenoid hydraulic valve defines the adjustment direction and speed of the controller.

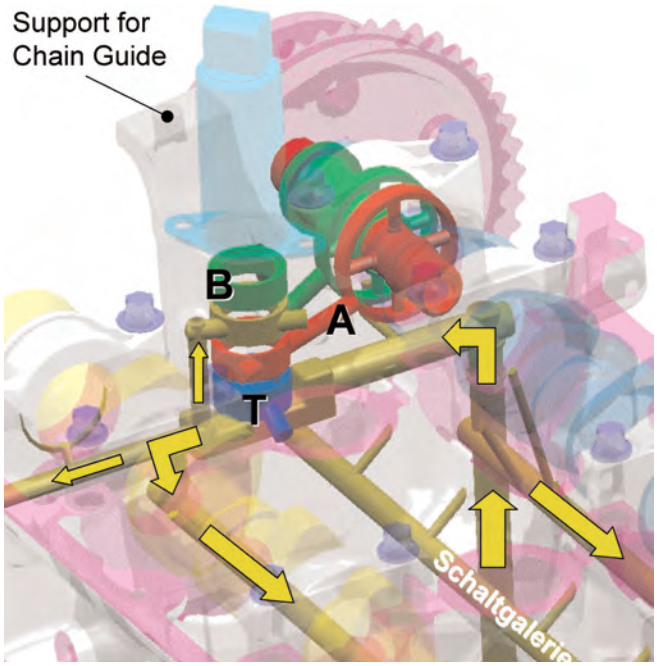

- Oil supply for cam phaser camshaft bearings and timing chain tensioner integrated in one bearing support.
- Screw connection of bearing support together with cam cap bolts.
- Oil Supply for first camshaft bearing (intake side) integrated in A-B oil supply for cam phaser (bleed > T).
- Advantage: no separate oil supply housing (V8 - 4.5) and no square section sealing rings necessary.

Tappet Evolution

Cayenne V8 engines use a “Ultra Leichtbau” lightweight 3CF bucket tappet.

Advantages are:
- Reduced mass
- Increased rigidity

Cylinder Head Design

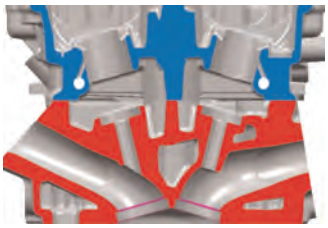

Previous Cylinder Head

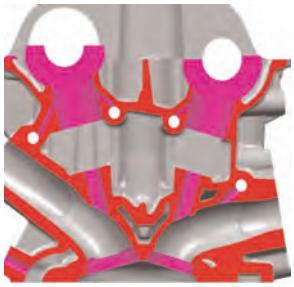

2nd Generation Cylinder Head

Additional weight savings were gained from the second generation V8 engine cylinder head design. On the left is the previous V8 4.5 liter cylinder head – fully machined, total weight including camshaft housing and bolts was 41 lbs (18.6 kg). On the right is the new second generation 4.8 liter head – fully machined, total weight including valve cover and DFI is 28 lbs (12.6 kg).

Notes:

Scavenging Concept

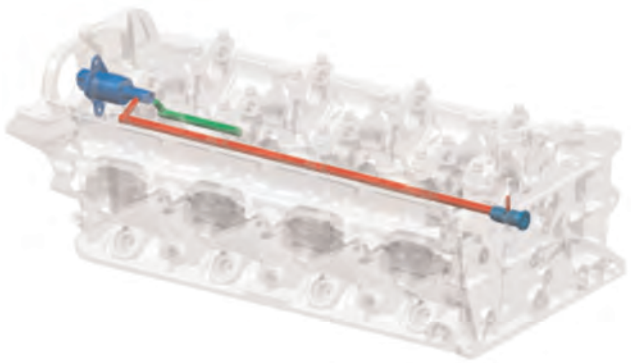

A scavenging restrictor is installed on the end of the control pressure line to keep the switching time to a minimum during valve lift control. This scavenging restrictor is used to bleed the line and reduce switching time.

Check Valve

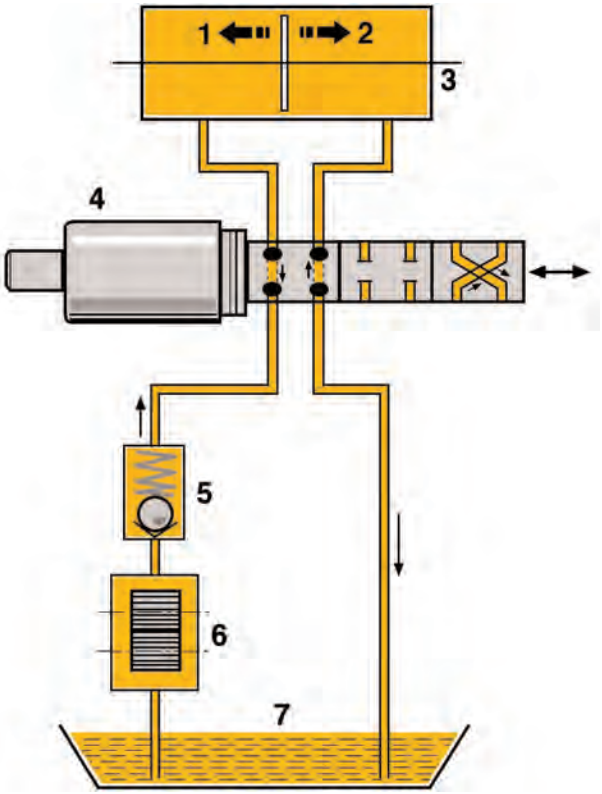

1 - Adjustment direction retarded
2 - Adjustment direction advanced
3 - Camshaft controller
4 - Solenoid hydraulic valve
5 - Check valve
6 - Oil pump
7 - Oil pan

The camshaft requires a high drive torque at times due to the valve actuation, but the camshaft continues rotating unaided at other times (alternating torques). If a check valve is inserted into the P-line and the solenoid hydraulic valve is energized, for example (adjustment in direction of advanced valve timing), the controller automatically intakes oil via the feed line, the solenoid hydraulic valve and the check valve for an advancing camshaft. If the camshaft then tries to lag due to the high drive torque, the check valve closes and the oil cannot escape. The camshaft is driven by the oil cushion of the sprocket during this time, as with a freewheel. The advancing and lagging phases of the camshafts repeat so that the camshaft automatically shifts to advanced valve timing in stages.

As the principle described above only functions with well sealed adjustment control systems and low-friction valve drives, oil pressure is required. To ensure that an extremely large oil pump is not required, the principle described above is taken advantage of when the engine is hot and at a low oil pressure through the use of the check valve. The check valve serves to increase the adjustment speed at low oil pressures.

Valves, Valve Springs

The intake and exhaust valves on the Cayenne S and Cayenne Turbo have a shaft diameter of 6 mm. The intake and exhaust valves are bi-metallic, i.e. the materials used for the valve plate and the lower part of the valve stem are different to those used for the upper part of the valve stem. In addition, the exhaust valves on the Cayenne Turbo are filled with sodium.

The intake valve springs on the Cayenne S and Cayenne Turbo are identical. They are designed as a conical double valve spring set. This gives a very compact design. The exhaust valve springs on the Cayenne S are conical single valve springs. The Cayenne Turbo features cylindrical double-valve spring sets to ensure that the exhaust valves close, even at higher pressures in the exhaust system.

Vacuum Pump

Increased engine dethrottling means that the vacuum supply is no longer sufficient for unfavorable underlying conditions, e.g. low external air pressure at high altitudes and highly dynamic driving. A mechanical single-vane pump driven by the camshaft is used for this reason.

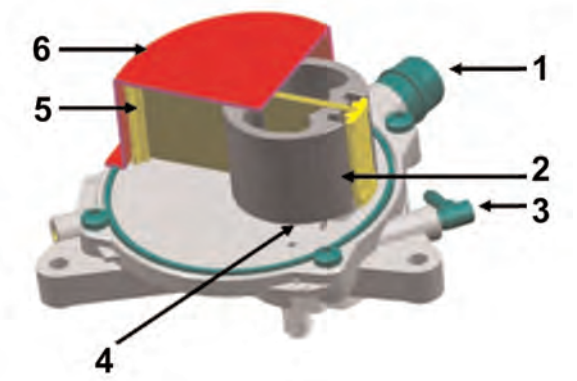

The pump delivery rate is 260cm/revolution.

1 - Intake opening
2 - Rotor
3 - Secondary load connection
4 - Outlet valve in crank chamber
5 - Vane with guide shoes
6 - Housing

Notes:

Timing Drive Mechanism

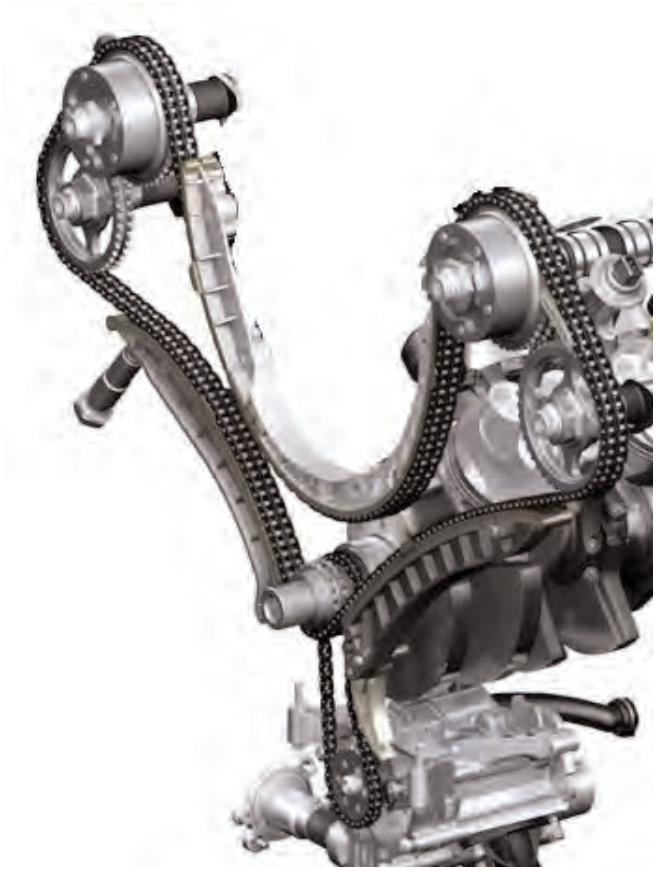

The chain is guided by two specially coated guide rails. The lower guide rail on cylinder row 1 to 4 is also designed as a tensioning rail. The hydraulic chain tensioner is connected to the engine oil circuit and is totally maintenance free.

Camshafts With Cylinder Specific Cam Contours

The intake and exhaust camshafts for both engines have a basic outer diameter of 38 mm. The intake valve lift is 3.6 mm and 11 mm. The exhaust valve lift on cylinders 1, 2, 6 and 8 is 8 mm, while the exhaust valve lift on cylinders 3, 4, 5 and 7 is 9.2 mm.

The engine design, with a V8 crankshaft and 90° throw, guarantees superb mass and torque balancing. In this engine design and a design with normal cam contours (same cam strokes), individual cylinders would be hindered during exhaust outflow into the exhaust manifold. The reason for this is that the surge of exhaust gas that emerges during the early (sooner than normal) exhaust valve opening for the respective cylinder (e.g. cylinder 2) goes into the overlap period of the next cylinder (cylinder 3). This would have a detrimental effect on the charging of the cylinders. Too many residual exhaust gases would also have a negative effect on the knock limit.

The firing order of the Cayenne (1-3-7-2-6-5-4-8) would put cylinders 3, 4, 5 and 7 at a disadvantage in terms of volumetric efficiency. These cylinders therefore have a larger cam stroke. This means that the cylinders are charged evenly, which results in an optimized torque curve in the entire rpm range.

Notes:

Sprocket

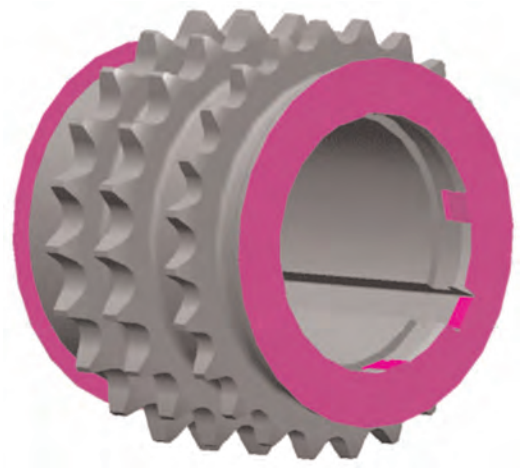

The lower sprocket, which drives the timing chain and the chain for the oil pump, has a friction disk on the front (facing the pulley) and rear (facing the crankshaft) for improved torque transmission.

Illustration above shows the surface of the friction disk viewed under a microscope.

Belt Drive

The secondary units, such as the generator, coolant pump, power-steering pump and air conditioning compressor, are driven from the torsional vibration balancer via a polyrib belt. A maintenance free belt tensioner ensures the correct belt tension in all operating states.

Lubricating Oil System

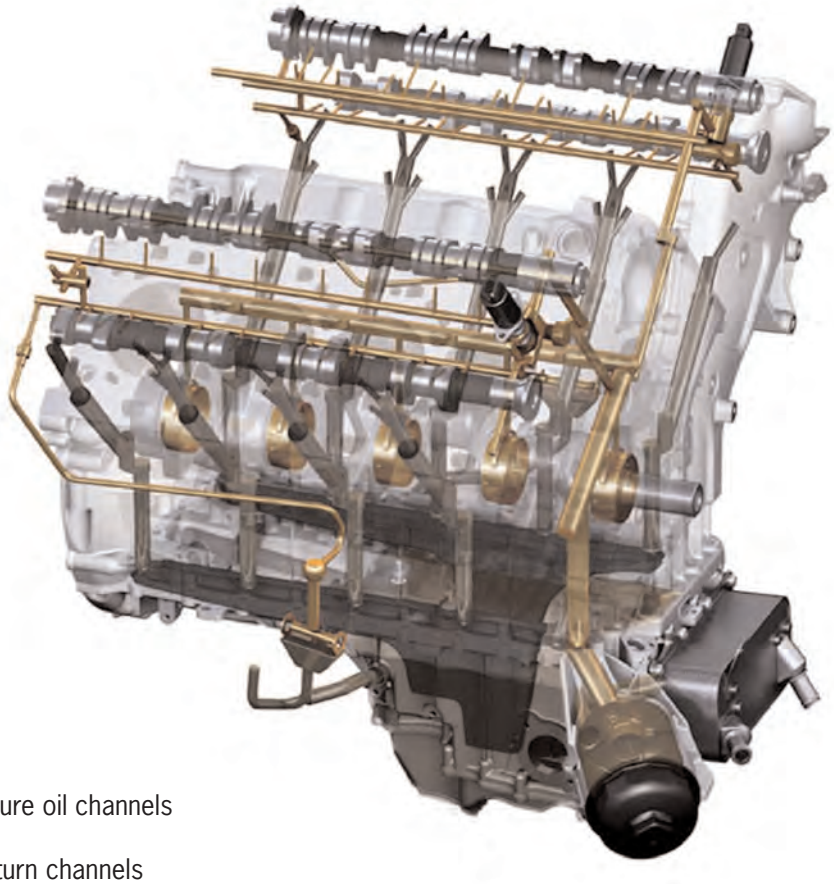

A - Pressure oil channels

B - Oil return channels

To ensure a reliable oil supply in all driving situations, the V8 engines in the Cayenne S and Cayenne Turbo have an integrated dry-sump lubrication system.

The oil pan is designed in two parts and has an upper and lower part. The oil-water heat exchanger and the oil filter are fitted directly on the upper part of the oil pan. To ensure a lightweight design, the windage tray, the oil return collection tank and the suction pipe are all together in a plastic housing fitted in the oil pan.

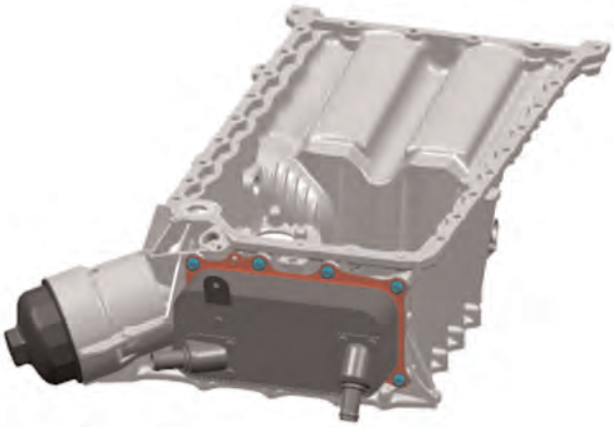

The oil pan wall is very thin so as to keep the weight as low as possible.

Oil Pump

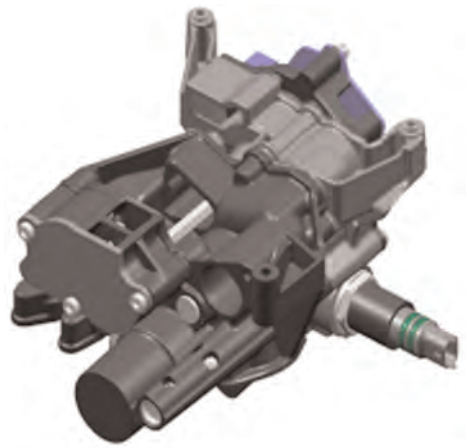

The integration of VarioCam Plus, the mechanical vacuum pump and the fact that the lower part of the crankcase is fully aluminum means that oil throughput on the Cayenne S and Cayenne Turbo is very high. A relatively large and efficient pump must be used to guarantee the required oil supply. However, a lot of energy is required to drive such a pump and this energy requirement in turn increases fuel consumption. To counteract this, a variable oil pump is used for the first time in the Cayenne S and Cayenne Turbo.

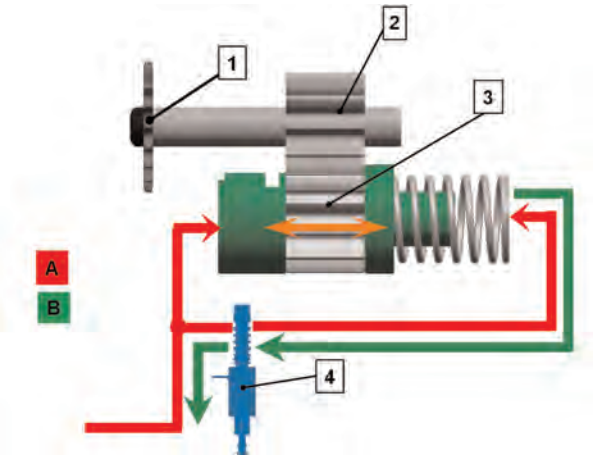

1 - Oil pump chain drive gear
2 - Oil pump driven gear
3 - Movable oil pump gear
4 - Oil pump control valve (lowers pressure on spring end of control piston)

Function

Depending on the input values for engine rpm, engine load, engine oil temperature and the expected change in engine rpm, a specific control valve position **(-4-)** is defined using a map in the DME control unit. The control valve position regulates the oil pressure for the spring piston on the gear wheel, which can move in axial direction. The oil pressure on the control piston is not regulated on the other side. The control valve is open fully in the non-energized state and as a result, the oil pressure is the same on both sides, which means that the gear wheel will not move.

In other words: the pressure difference between the spring piston and the control piston can be used to control every position. When the gear wheel moves, the teeth are still only partially engaged and as a result, performance and friction as well as energy requirements are reduced.

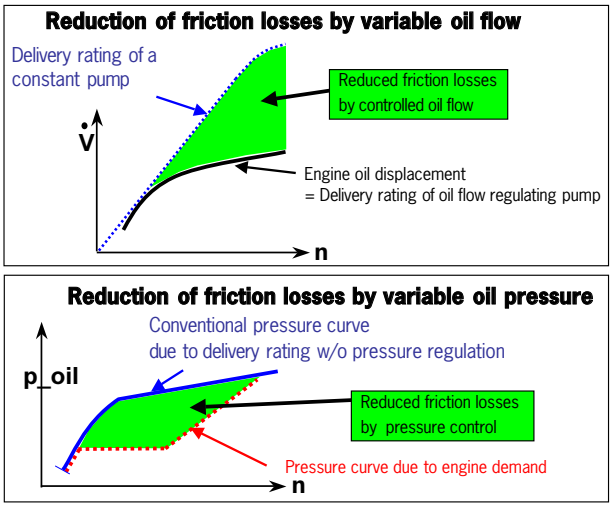

Notes:

Cayenne Turbo Oil Pump

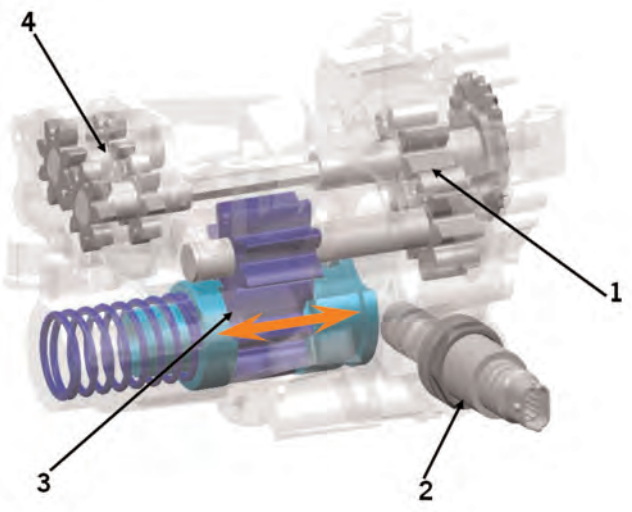

1 - Intake stage
2 - Control valve
3 - Variable pressure stage
4 - Turbocharger suction pump

The Cayenne Turbo has an additional pressure oil line for turbocharger lubrication. A turbocharger suction pump **(-4-)** is integrated in the main oil pump for suctioning off the lubricating oil.

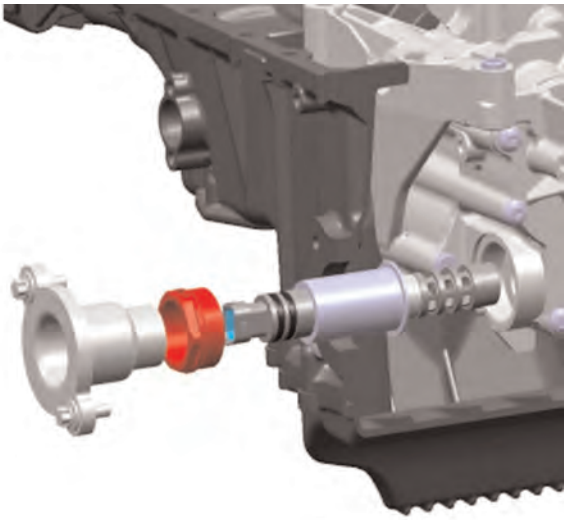

The control valve is fitted on the oil pump in such a way that it can be accessed from the outside.

Oil Spray Jets

The temperature of the pistons in the Cayenne S and Cayenne Turbo engine is reduced by means of spray cooling. The spray jets are fitted on the upper part of the crankcase. The spray oil is also used for improved lubrication of the cylinder lining. To ensure the necessary engine oil pressure at low rpms and high engine oil temperatures, the spray jets have an opening pressure of approx. 1.8 bar.

Positive Crankcase Ventilation

During combustion, every engine blows some of the combustion gases past the piston towards the crankcase – these gases are called blow-by gases. If these gases are not drawn off, the pressure in the crankcase would increase considerably. A vent connection is installed in the crankcase for this reason. For environmental protection reasons, these gases are not released into the atmosphere, but are sent back to the engine for combustion via the intake system. Of course, these positive crankcase ventilation gases contain a high proportion of engine oil and other combustion residues as well as fuel residues in some cases. If these gases get into the intake duct, they will contaminate the intake air and can then impair running smoothness, exhaust emissions and reduce knock resistance. For these reasons effective oil separation is important for the engine.

Notes:

Positive Crankcase Ventilation – Naturally Aspirated Engine

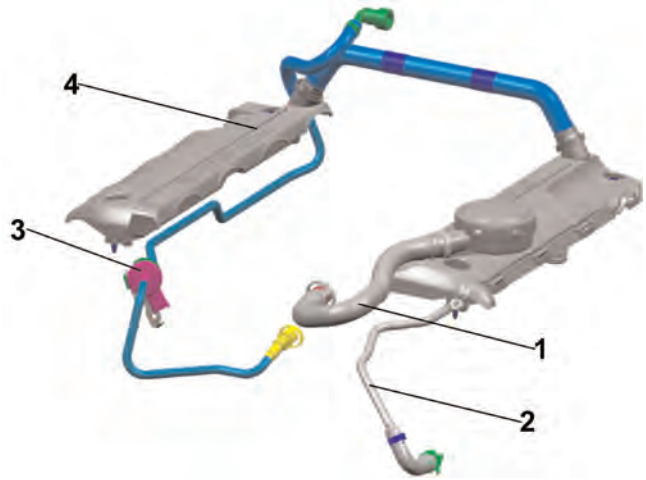

1 - Return connection for blow-by gases
2 - Return line
3 - Tank vent
4 - Positive crankcase ventilation

Positive Crankcase Ventilation - Turbo Engine

The positive crankcase ventilation system in the Cayenne Turbo can reduce the amount of fuel that goes into the engine oil during combustion. The aeration and ventilation system (Positive Crankcase Ventilation-PCV) ventilates the crankcase with a steady stream of fresh air, which accelerates the evaporation of fuel that is carried in.

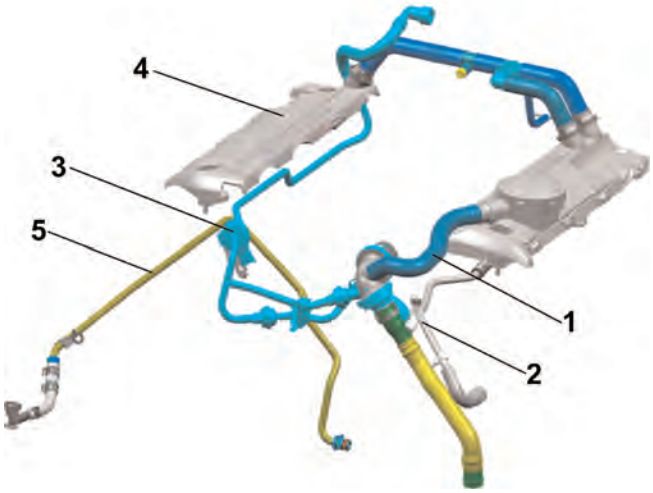

1 - Return connection for blow-by gases
2 - Return line
3 - Tank vent
4 - Positive crankcase ventilation
5 - PCV connection

For this purpose, fresh air is removed between the charge air cooler and throttle valve and is delivered to the crank chamber via a line. The pressure that exists at any time between the removal position and the crankcase causes a steady flow of fresh air through the crankcase. To ensure enough vacuum in the crankcase in all operating states, the vacuum in the intake manifold is used in the part-load ranges. A pressure regulating valve regulates this vacuum until the required value is reached. The vacuum from the compressor is used in the boost range (no vacuum present).

Cayenne S Cooling System

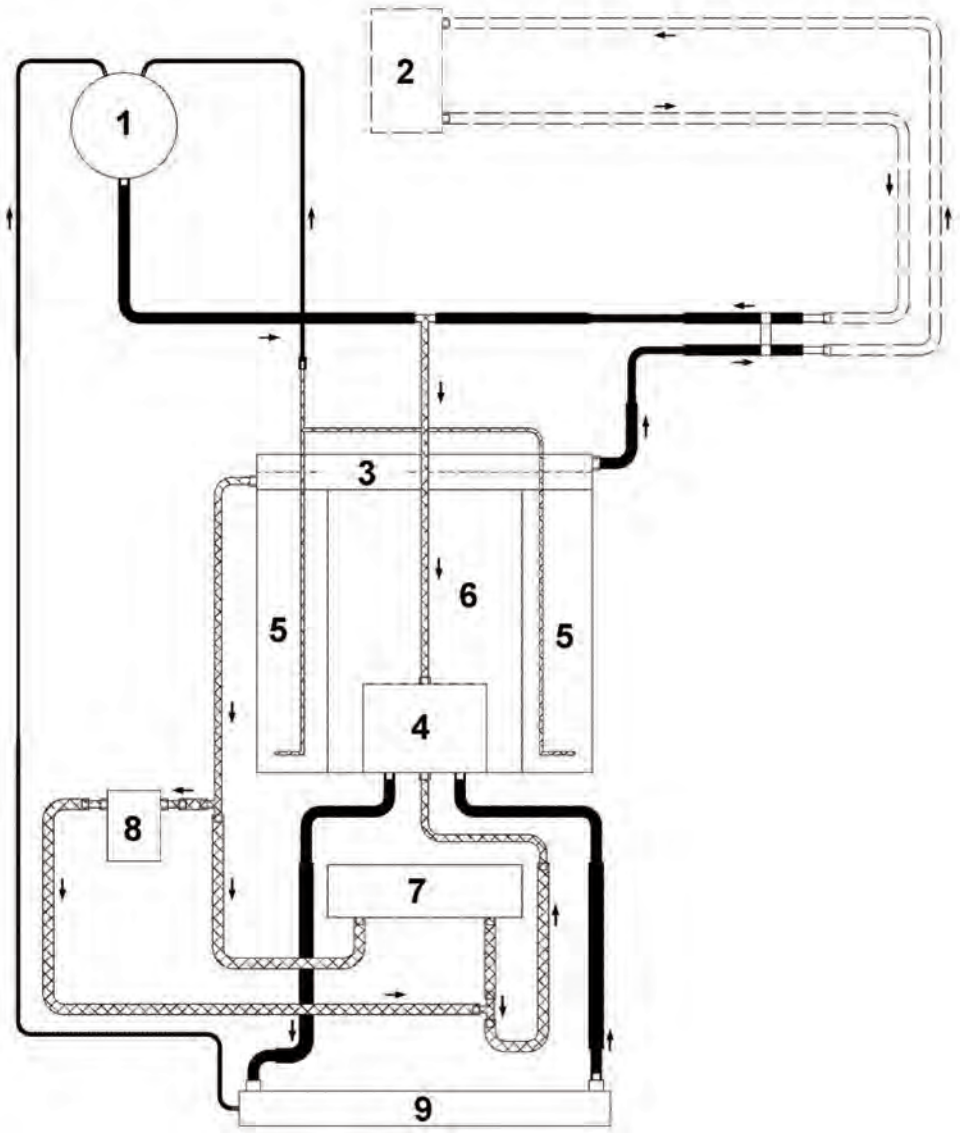

1 - Coolant reservoir
2 - Heat exchanger
3 - Coolant collection pipe
4 - Coolant pump/thermostat housing
5 - Cylinder head
6 - Crankcase
7 - Oil-water heat exchanger
8 - Generator
9 - Radiator

Cayenne Turbo Cooling System

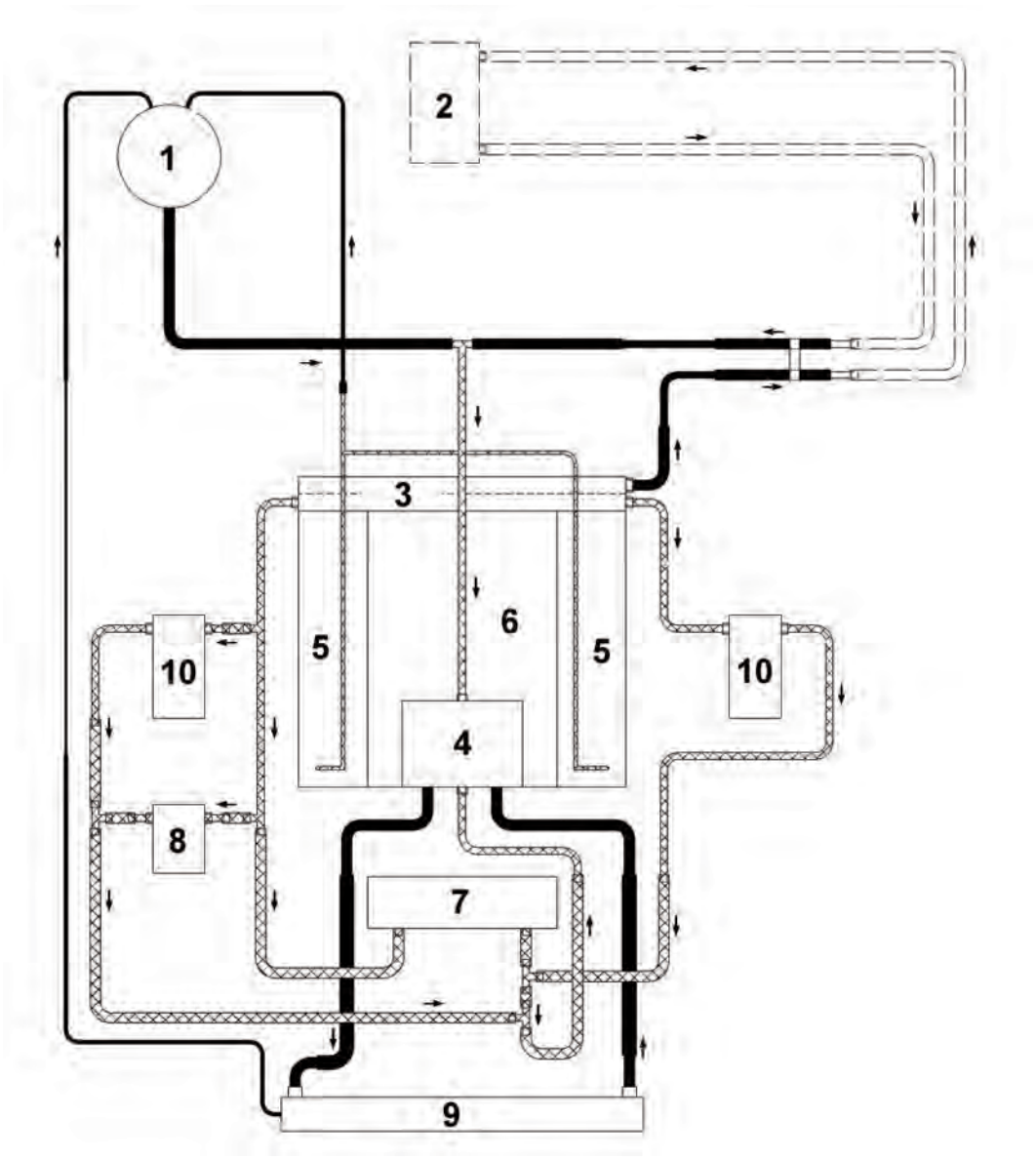

1 - Coolant reservoir
2 - Heat exchanger
3 - Coolant collection pipe
4 - Coolant pump/thermostat housing
5 - Cylinder head
6 - Crankcase
7 - Oil-water heat exchanger
8 - Generator
9 - Radiator
10 - Turbocharger

Subject **Page**

General 3
Cayenne Engine Data 3
Crankcase 3
Pistons 4
Connecting Rods 4
Belt Drive 5
V-Angle 6
Cylinder Head 6
Camshaft Adjustment 6
Exhaust Gas Recirculation 8
Positive Crankcase Ventilation 9
Cyclone Oil Separator 10
Oil Lubrication System 11
Cooling System 13

Notes:

1 - Engine M 55.01

General

The Cayenne engine is designed as a 6-cylinder, direct fuel injection V engine. The 3.6 liter V6 cylinder engine offers a wide rpm range improved power output and torque combined with low fuel consumption and emission values. Being a long-stroke engine, the V6 generates high torque even at low rpms.

Engine Data – Second Generation V6

Engine type	M55.01
No. of cylinders	6
Bore	89 mm
Stroke	96.4 mm
Displacement	3.6 Liter
V-angle	10.6°
Compression ratio	12.0
Max. output	290 HP (213 kW)
At engine speed	6200 rpm
Max. torque	285 ftlb. (385 Nm)
At engine speed	3000 rpm
Governed speed	6700 rpm
Engine weight (manual transmission)	417 lbs (189 kg)
Engine weight (Tiptronic)	390 lbs (177 kg)
Firing order	1-5-3-6-2-4

Crankcase

The crankcase with the cylinders is made of grey cast iron with lamellar graphite in weight optimized design. The cylinders are arranged in a staggered configuration in the 10.6° V-angle. The cylinder number 1 is located on the passenger side.

Crankshaft

The drop-forged crankshaft runs on seven bearings. Main bearing 4 is designed as a thrust bearing. Axial play is determined by two thrust plates, which are inserted into the bearing supports. The main bearings are two-component bearings and have a diameter of 60 mm.

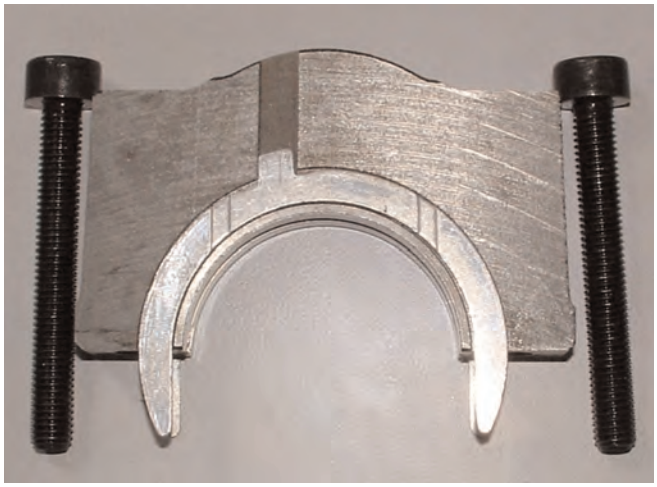

Located on the crankshaft are the pulse-generating wheel for the speed and reference mark transmitter **-A-** and the drive sprocket for the intermediate shaft **-B-**.

Notes:

Pistons

The pistons are designed as recessed pistons made of aluminum alloy. They have a graphite friction coating at the sides to improve friction performance of the piston. The pistons are different for cylinder bank 1 and cylinder bank 2. The valve recesses and combustion chamber troughs are arranged differently. The position and shape of the piston recess allows the injected fuel to be whirled around and mixed with the air that is drawn in.

1 - Friction coating
2 - Piston recess

Connecting Rods

The connecting rods are cut rather than cracked. The conrod eye is trapezoid. The conrod bearings are two-component bearings with a diameter of 54 mm and are molybdenum coated, which ensures good friction characteristics and a high load capacity.

Belt Drive

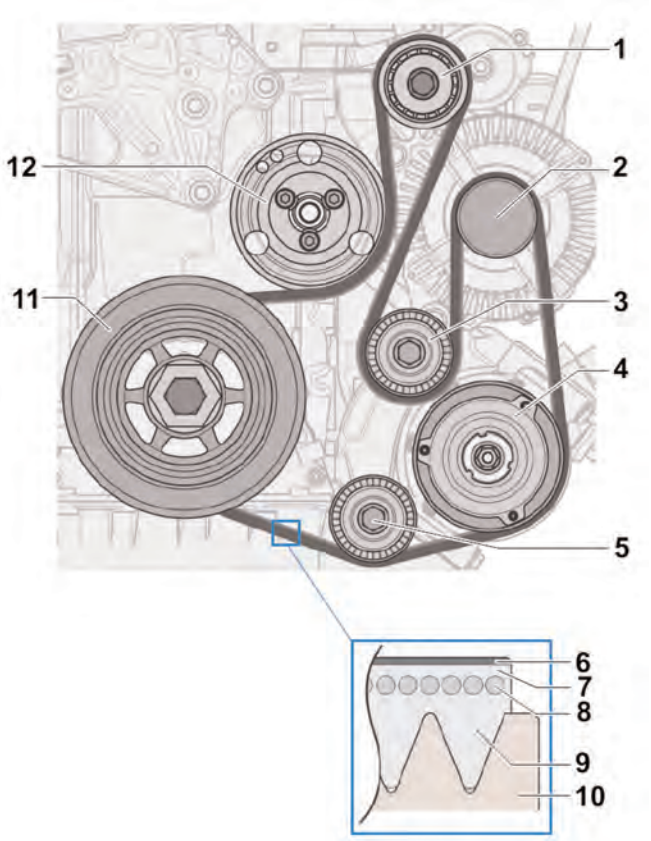

1 - Tensioning roller
2 - Generator drive
3 - Deflection roller
4 - Air conditioning compressor drive
5 - Deflection roller
6 - Outer fabric
7 - Covering plate
8 - Polyester cord
9 - Substructure
10 - Poly V-belt pulley
11 - Crankshaft poly V-belt pulley
12 - Coolant pump drive

The poly V-belt is a single sided poly V-belt. The belt is driven by the crankshaft via the poly V-belt pulley with vibration damper. The air conditioning compressor, generator and coolant pump run in the belt drive. A belt tensioner ensures that the poly V-belt is always tensioned correctly.

Chain Drive

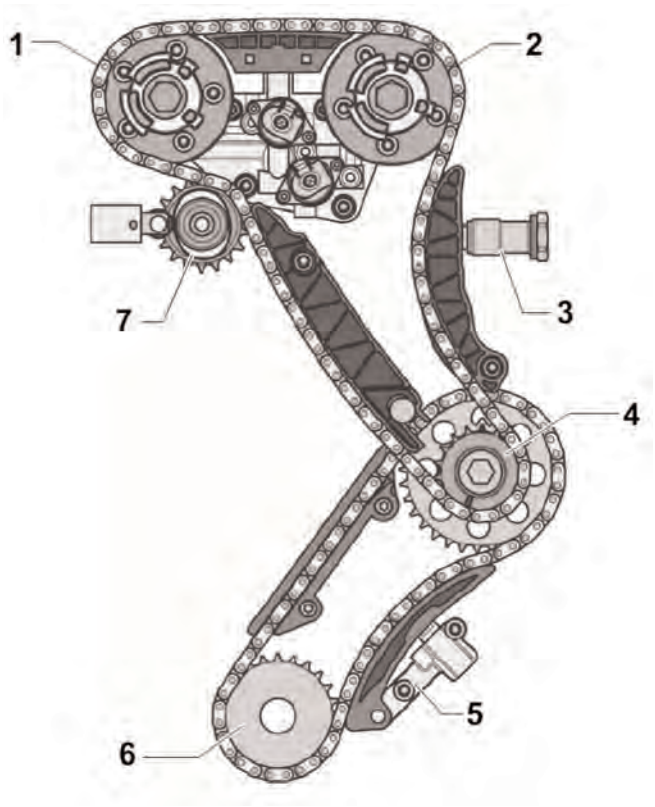

1 - Inlet camshaft drive
2 - Outlet camshaft drive
3 - Hydraulic chain tensioner
4 - Oil pump drive
5 - Hydraulic chain tensioner
6 - Crankshaft gear
7 - Fuel high pressure pump drive

The chain drive is on the power output side of the engine. It consists of the primary roller-type chain and the camshaft roller-type chain. The primary roller-type chain is driven by the crankshaft. It drives the camshaft roller-type chain and the oil pump via a sprocket. The camshaft roller-type chain drives the two camshafts and the fuel high-pressure pump. The hydraulic chain tensioner guarantees the exact tensioning of the cam drive chain.

V-Angle

The V-angle of the cylinder block is 10.6° (previously 15°). This small V-angle ensures the required cylinder wall strengths without increasing the installation dimensions of the engine.

Articulation

The small V-angle causes the longitudinal axis of the cylinder to move outward with respect to the lower crankshaft. The distance between the longitudinal axis of the cylinder and the crankshaft center axis is the articulation. Accordingly, the small V-angle increases the articulation (in this case: 22 mm).

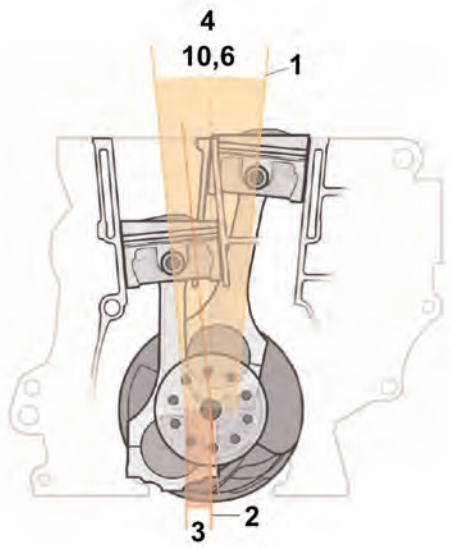

1 - Longitudinal axis of cylinder
2 - Crankshaft center axis
3 - Articulation
4 - V-angle

Cylinder Head

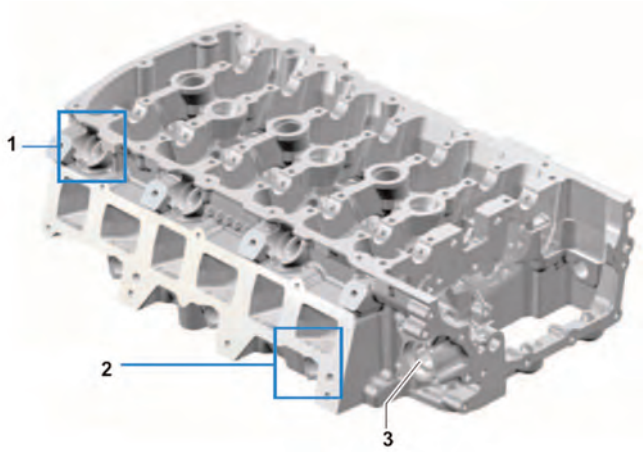

1 - Installation position of fuel injectors 1, 3, 5
2 - Installation position of fuel injectors 2, 4, 6
3 - Installation position of fuel high pressure pump

The one piece cylinder head is made of an aluminum silicon copper alloy. The cylinder head is used both for mounting the chain drive and for connecting the fuel high pressure pump. The fuel injectors for both cylinder banks are on the intake side of the cylinder head.

The bores for the fuel injectors for cylinders 1, 3 and 5 are above the intake manifold flange. The fuel injectors for cylinders 2, 4 and 6 are inserted below the intake manifold flange. This arrangement allows the fuel injectors for cylinders 1, 3 and 5 to run through the intake port on the cylinder head.

Camshaft Adjustment

The intake and exhaust camshafts are adjusted by way of a vane adjuster. The DME control unit determines the current position of the camshaft in relation to the crankshaft (actual angle) on the basis of the speed sensor signal and the Hall sender signal. The position controller in the control unit receives the desired nominal angle via the programmed map values (speed, load, engine temperature). A regulator in the DME control unit activates a solenoid hydraulic valve according to the desired adjustment when there is a difference between the nominal angle and actual angle. The adjustment angle is 52° in relation to the crankshaft on the intake side and 22° in relation to the crankshaft on the exhaust side.

When idling, the camshafts are set that the intake camshaft opens and closes late. The exhaust camshaft is adjusted that it closes well before TDC. This results in stable idling on account of the low residual gas content in the combustion process.

In order to attain a good power output at high rpms, opening of the exhaust valves is retarded. This allows the expansion effect of the combustion process to act on the piston for a prolonged period. The intake valve opens after TDC and closes late after BDC. This way, the dynamic ram effects of the inflowing air are utilized to increase power output.

In order to attain maximum torque, high volumetric efficiency is required for the cylinders. To this end, the intake valves must be opened early. As a result of early opening they also close early, thereby avoiding the expulsion of fresh gases. The exhaust camshaft closes shortly before TDC.

Internal exhaust gas recirculation is carried out while the intake and exhaust camshafts are being adjusted. This results in an overflow of the exhaust gas from the exhaust port into the intake port during valve overlap (intake and outlet valves open). The size of valve overlap determines the quantity of exhaust gas returned in the course of internal exhaust gas recirculation. To this end, the intake camshaft is set such that it opens well before TDC while the exhaust camshaft closes only shortly before TDC. Both valves are thus open and exhaust gas is recirculated. The advantages of internal exhaust gas recirculation as opposed to the external alternative are the fast response of the system and uniform distribution of the recirculated exhaust gases.

The camshaft adjustment system comprises the following components:

- Two vane adjusters
- Two electromagnetic valves
- Timing chain housing

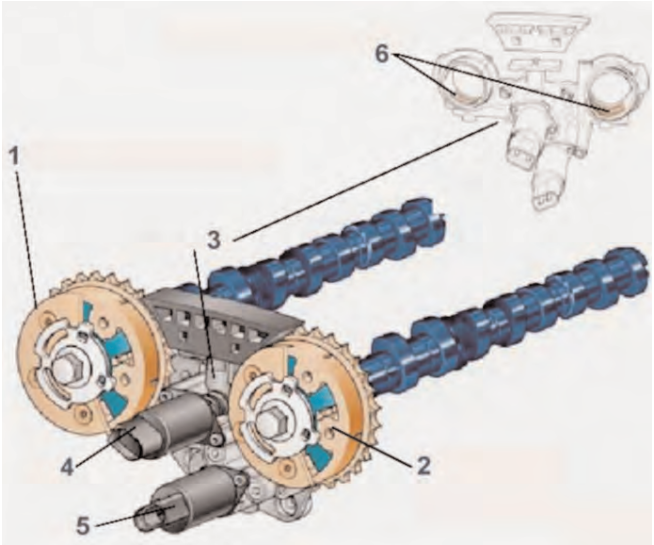

1 - Vane adjuster for intake camshaft
2 - Vane adjuster for exhaust camshaft
3 - Timing chain housing
4 - Valve for intake camshaft adjustment
5 - Valve for exhaust camshaft adjustment
6 - Oil ducts for the ring passage in the camshafts

Notes:

The DME control unit actuates electromagnetic valves 4 and 5 to adjust the camshafts. The valves subsequently open oil passages in the timing chain housing. The engine oil then flows via the timing chain housing and the camshaft into the vane adjuster. The vane adjusters turn, adjusting the camshafts in accordance with the instructions from the DME control unit.

Exhaust Gas Recirculation

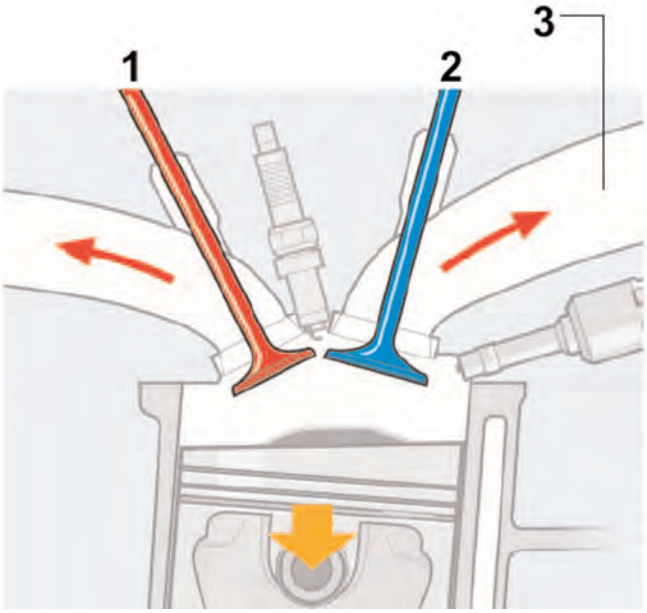

1 - Exhaust valve
2 - Intake valve
3 - Intake manifold vacuum

Internal exhaust gas recirculation counteracts the formation of nitrogen oxides NOx. Just like external exhaust gas recirculation, the formation of NOx is based on the fact that the combustion temperature is reduced through the introduction of combustion exhaust gases. The combustion gases in the fresh air/fuel mixture cause a slight lack of oxygen, whereby the combustion does not become as hot as it would if there was surplus oxygen. Nitrogen oxides are only formed in a greater concentration at a relatively high temperature. The reduced combustion temperature in the engine and the lack of oxygen prevent the formation of NOx.

Function

Both the intake and exhaust valves are open during the exhaust stroke. The high intake manifold vacuum causes some of the combustion gases from the combustion chamber to be sucked back into the intake port and then flushed back into the combustion chamber for the next combustion with the next intake stroke.

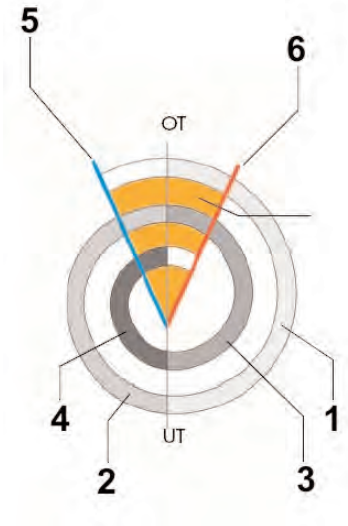

1 - Stroke 1
2 - Stroke 2
3 - Stroke 3
4 - Stroke 4
5 - Intake valve opens
6 - Exhaust valve closes

This has the following advantages:

- Reduced consumption due to reduced gas exchange work.
- Increased part-load range with exhaust gas recirculation.
- Smoother running.
- Exhaust gas recirculation is possible even when the engine is cold.

Positive Crankcase Ventilation

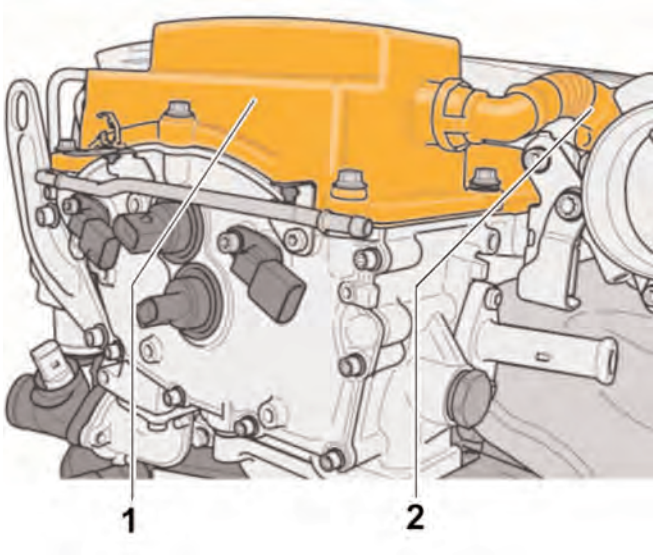

1 - Cyclone oil separator
2 - Positive crankcase ventilation heating

Positive crankcase ventilation prevents hydrocarbon-enriched vapors (blow-by gases) from the crankcase from getting into the outer atmosphere. The positive crankcase ventilation system includes vent ducts in the cylinder block and cylinder head, the cyclone oil separator and positive crankcase ventilation heating.

The blow-by gases in the crankcase are drawn in by the intake manifold vacuum via:

- the vent ducts in the cylinder block,
- the vent ducts in the cylinder head,
- the cyclone oil separator and
- the positive crankcase ventilation heating system and are then introduced back into the intake manifold.

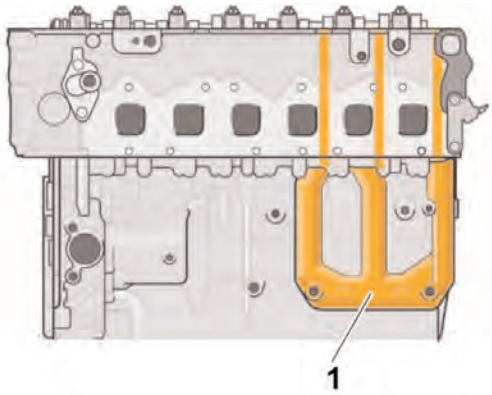

1 - Vent ducts in the cylinder block and cylinder head.

Notes:

Cyclone Oil Separator

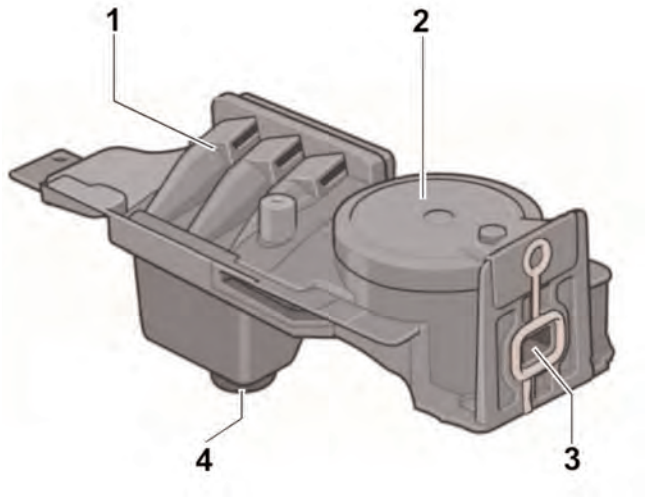

1 - Cyclone oil separator
2 - Pressure regulating valve
3 - To intake manifold
4 - Oil discharge opening

The cyclone oil separator is in the cylinder head cover. Its main function is to separate oil from the blow-by gases in the crankcase and return it to the oil circuit. A pressure regulating valve limits the intake manifold vacuum from approx. 700 mbar to approx. 40 mbar. This prevents the entire intake manifold vacuum and the internal crankcase pressure from affecting positive crankcase ventilation, thereby drawing in engine oil or damaging seals.

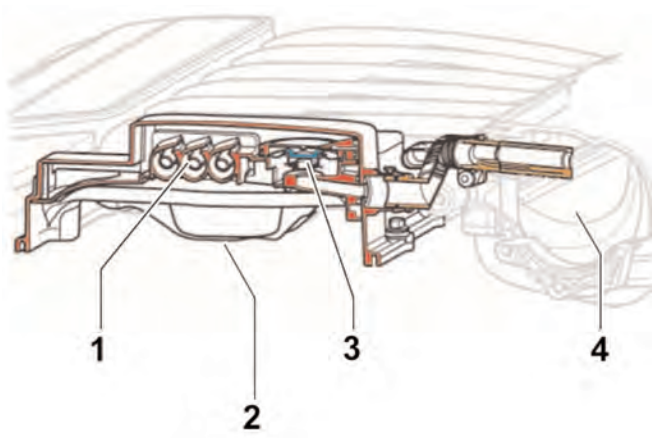

1 - Cyclone oil separator
2 - Oil-discharge opening
3 - Vacuum valve
4 - Intake manifold

Function

The cyclone oil separator separates the oil from the oil vapor that is drawn in. It works according to the principle of centrifugal separation. The cyclone design of the oil separator means that the oil vapors are moved in a rotating movement. The centrifugal force that is created flings the oil onto the partition wall, where it combines to form larger drops. While the separated oil drips into the cylinder head, the gas particles are fed into the intake manifold through a flexible pipe.

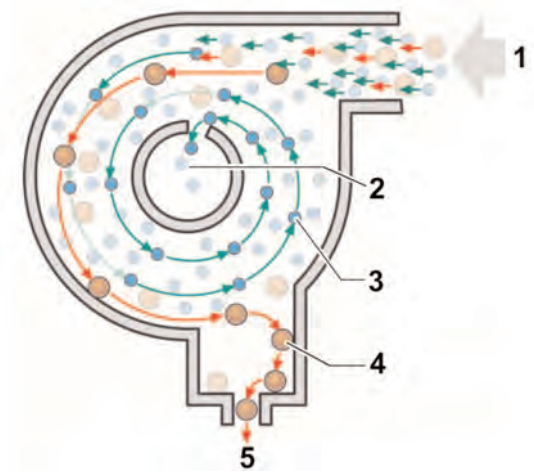

1 - Intake
2 - Gas feed to intake manifold
3 - Gas particles
4 - Oil drops
5 - Oil-discharge opening in crankcase

Positive Crankcase Ventilation Heating

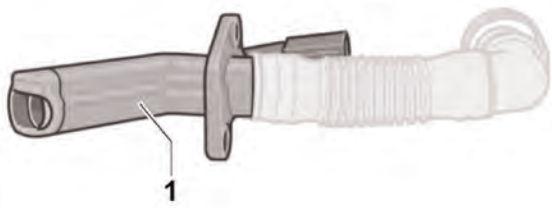

The heating element **-1-** is inserted in the flexible pipe connecting the cyclone oil separator to the intake manifold and prevents the incoming blow-by gases from freezing when the intake air is very cold.

Oil Circuit

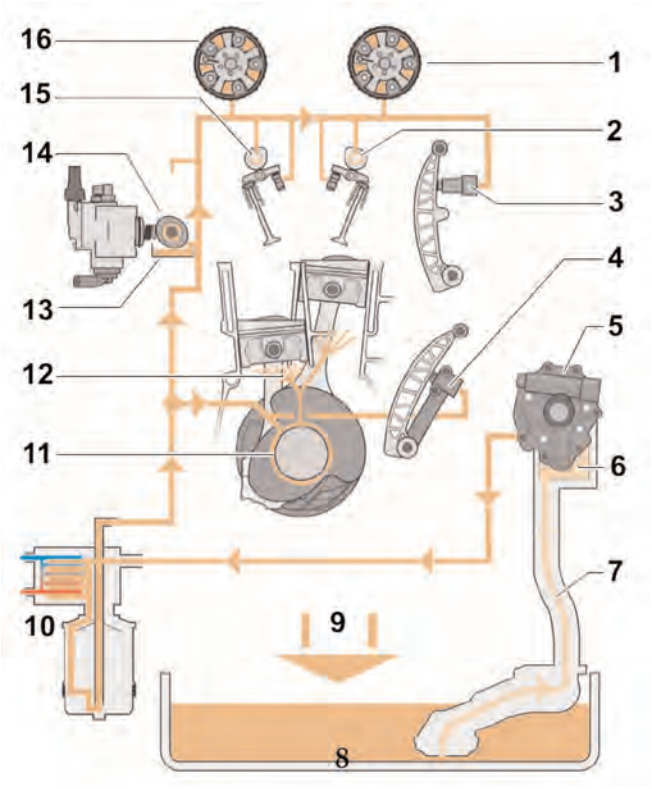

1 - Camshaft adjuster
2 - Camshaft bearing
3 - Chain tensioner
4 - Chain tensioner
5 - Oil pump
6 - Oil reservoir
7 - Intake duct
8 - Oil pan
9 - Oil return
10 - Oil filter / oil/water heat exchanger
11 - Crankshaft bearing
12 - Piston spray nozzles
13 - Oil reservoir
14 - Fuel high-pressure pump drive
15 - Hydraulic tappet
16 - Camshaft adjuster

The oil pressure is generated by a self-priming oil pump **-5-**. This is mounted in the cylinder block and is driven by the chain drive. The installation position ensures a long suction route **-7-**, which lasts for the duration of time required to supply initial oil to the components. For this reason, oil is taken from a reservoir **-6-** behind the oil pump to guarantee the initial oil supply. The oil pump draws the oil from the oil pan **-8-** and then pumps it to the oil filter and oil/water heat exchanger **-10-**.

Oil Pump With Oil Reservoir

The oil reservoir is formed in the cylinder block by a cavity behind the oil pump. It has a volume of approx. 280 ml and is retained even after the engine is stopped.

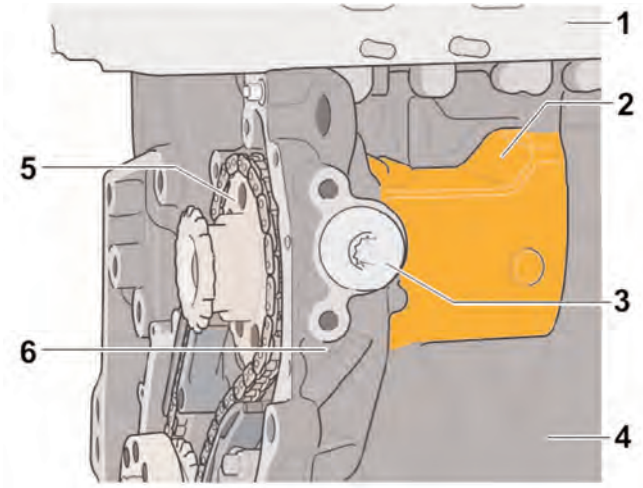

1 - Cylinder head
2 - Oil reservoir
3 - Service opening
4 - Cylinder block
5 - Drive gear
6 - Oil pump

Notes:

Service Opening

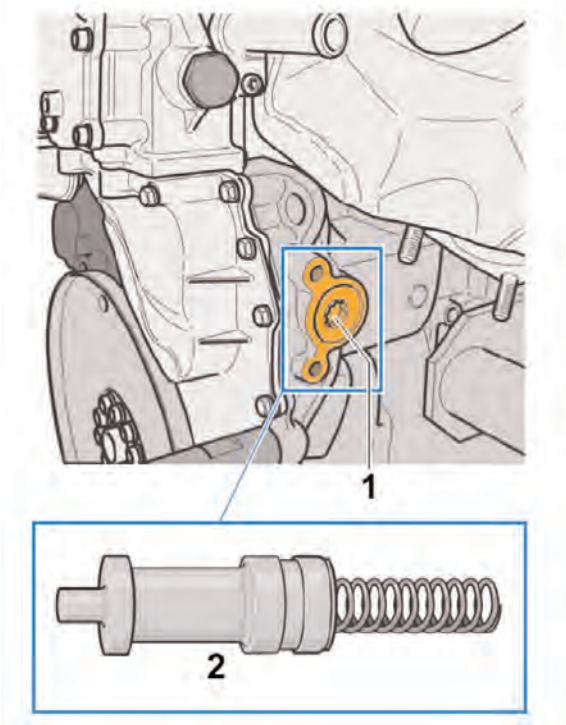

1 - Cover screw
2 - Pressure piston

The service opening allows access to the oil pressure regulating piston in the oil pump when the engine is installed. The pressure piston in the oil pump can be removed through the opening without having to remove the chain drive by unscrewing the cover screw and a second inner screw.

Oil/Water Heat Exchanger With Oil Filter

The oil/water heat exchanger and the oil filter with bypass valve form one unit.

Oil Return

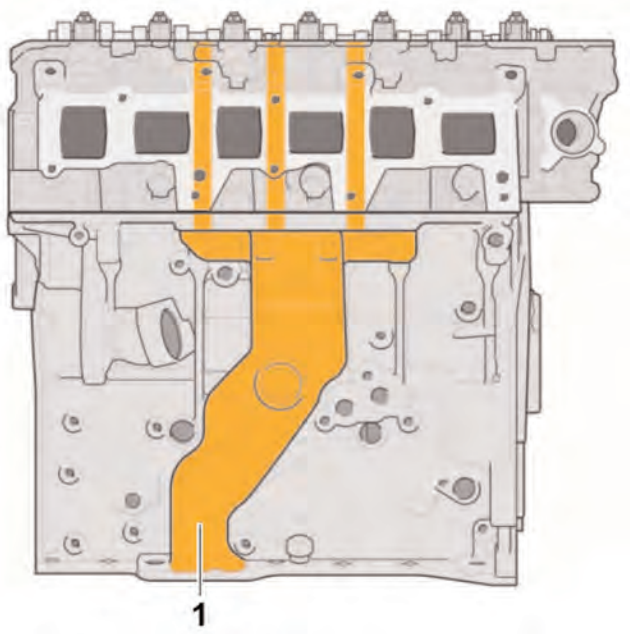

The oil that flows back is routed into a central oil return duct **-1-** in the cylinder block via three return ducts in the cylinder head. The oil then flows back under the oil level into the oil pan. In addition to the central oil return system, oil at the front is also returned to the oil pan via the chain drive housing.

Notes:

Cooling System

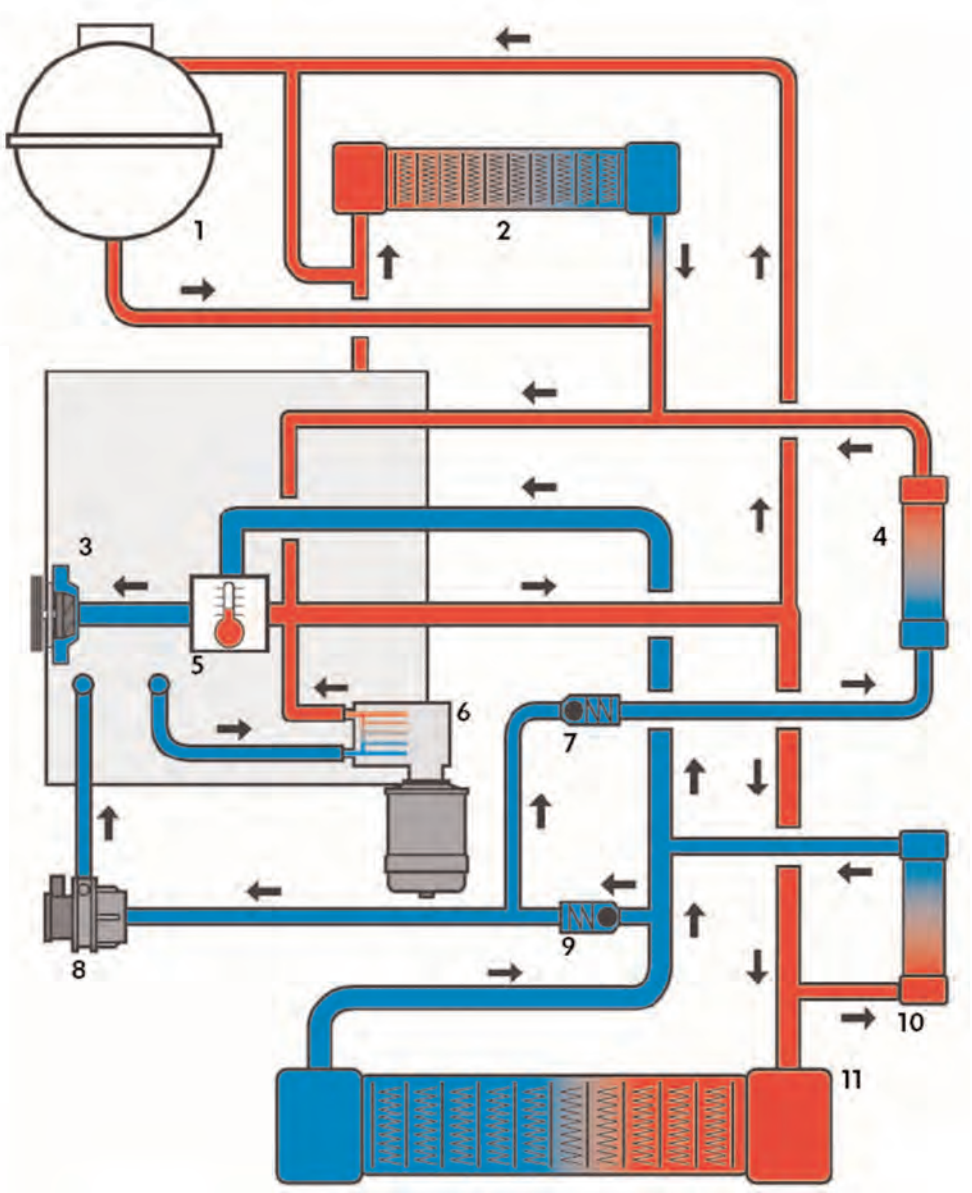

1 - Reservoir
2 - Heat exchanger
3 - Coolant pump
4 - ATF/water heat exchanger
5 - Coolant thermostat
6 - Oil/water heat exchanger
7 - Check valve
8 - Electric additional coolant pump
9 - Check valve
10 - Additional radiator
11 - Vehicle radiator

Coolant is circulated by the mechanical coolant pump. The pump is driven by the poly V-belt. The circuit is controlled by the thermostat. The check valves are integrated into the circuit in such a way as to prevent coolant flowback.

The amount of coolant depends on the vehicle equipment and is generally between 14 qts (13.2 liters) and 18.6 qts (17.6 liters).

Notes:

Notes:

Temperature Conversion

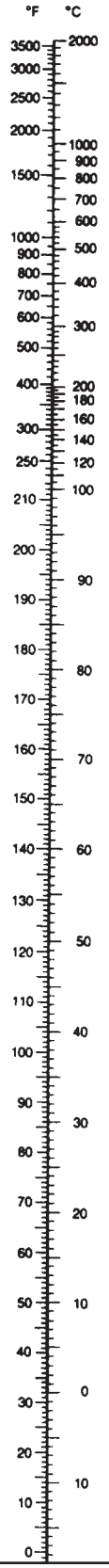

Metric Conversion Formulas

INCH	X	25.4	=	MM
MM	X	.0394	=	INCH
MILE	X	1.609	=	KILOMETER (KM)
KM (KILOMETER)	X	.621	=	MILE
OUNCE	X	28.35	=	GRAM
GRAM	X	.0352	=	OUNCE
POUND (lb)	X	.454	=	KILOGRAM (kg)
kg (KILOGRAM)	X	2.2046	=	lb (POUND)
CUBIC INCH	X	16.387	=	CUBIC CENTIMETER (cc)
cc (CUBIC CENTIMETER)	X	.061	=	CUBIC INCH
LITERS.	X	.0353	=	CUBIC FEET (cu.ft.)
CUBIC FEET (cu.ft.)	X	28.317	=	LITERS
CUBIC METERS	X	35.315	=	CUBIC FEET (cu.ft.)
FOOTPOUND(ft lb).	X	1.3558	=	NEWTON METER (Nm)
Nm (NEWTON METER).	X	.7376	=	ft lb (FOOT POUND)
HORSEPOWER (SAE) . . .	X	.746	=	KILOWATT (Kw)
HORSEPOWER (DIN) . . .	X	.9861	=	HORSEPOWER (SAE)
Kw (KILOWATT)	X	1.34	=	HORSEPOWER (SAE)
HORSEPOWER (SAE) . . .	X	1.014	=	HORSEPOWER (DIN)
MPG (MILES PER GALLON) . . .	X	.4251	=	Km/l (KILOMETER PER LITER)
BAR.	X	14.5	=	POUND/SQ. INCH (PSI)
PSI (POUND SQUARE INCH). . . .	X	.0689	=	BAR
GALLON.	X	3.7854	=	LITER
LITER.	X	.2642	=	GALLON
FAHRENHEIT	-	32÷1.8	=	CELSIUS
CELSIUS	X	1.8+32	=	FAHRENHEIT

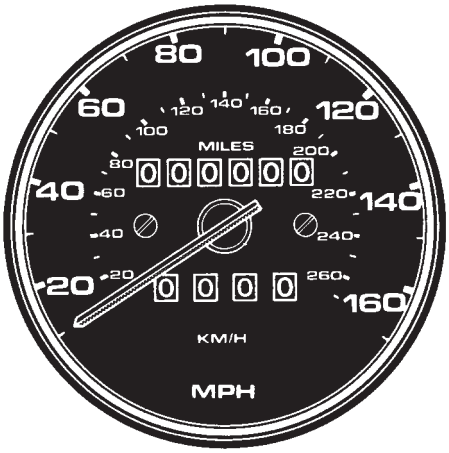

Notes:

ASE CERTIFIED ™

WE SUPPORT VOLUNTARY TECHNICIAN CERTIFICATION THROUGH

National Institute for

AUTOMOTIVE SERVICE EXCELLENCE

Part Number - PNA P10 C03